Product datasheet

Specifications

Green Premium™

Head for illuminated selector switch, Harmony XB5, Harmony XALF, grey plastic, green handle, 22mm, universal LED, 2 positions

Local distributor code:

237223333 ZB5AK1233

Important message: A change in appearance may be noted on the product but does not affect its use in terms of function and safety. This makes it compatible with our Universal LED blocks
EAN Code: 3389110906066

Main

Range Of Product	Harmony XB5 Harmony XALF
Product Or Component Type	Head for illuminated selector switch
Product Compatibility	Universal LED
Device Short Name	ZB5
Bezel Material	Dark grey plastic
Mounting Diameter	22 mm
Head Type	Standard
Sale Per Indivisible Quantity	1
Shape Of Signaling Unit Head	Round
Type Of Operator	stay put
Operator Profile	Green standard handle
Operator Position Information	2 positions 90°

Complementary

Cad Overall Width	29 mm
Cad Overall Height	29 mm
Cad Overall Depth	43 mm
Net Weight	0.016 kg
Mechanical Durability	1000000 cycles
Station Name	XALD 1...5 cut-outs XALK 2...5 cut-outs
Electrical Composition Code	M3 for <4 contacts using single blocks in front mounting with integral LED M6 for <2 contacts using single blocks in front mounting with integral LED and transformer M10 for <2 contacts using single blocks in front mounting with integral LED MF1 for <2 contacts using single blocks in front mounting with integral LED MR1 for <2 contacts using single blocks in rear mounting with integral LED M4 for <4 contacts using single and double blocks in front mounting with integral LED
Device Presentation	Basic element

Environment

Protective Treatment	TH

Disclaimer: This documentation is not intended as a substitute for and is not to be used for determining suitability or reliability of these products for specific user applications

Ambient Air Temperature For Storage	-40…70 °C
Ambient Air Temperature For Operation	-40…70 °C
Overvoltage Category	Class II conforming to IEC 60536
Ip Degree Of Protection	IP66 conforming to IEC 60529 IP67 IP69 IP69K
Nema Degree Of Protection	NEMA 13 NEMA 4X
Resistance To High Pressure Washer	7000000 Pa at 55 °C, distance : 0.1 m
Ik Degree Of Protection	IK04 conforming to IEC 50102
Standards	UL 508 CSA C22.2 No 14 JIS C8201-5-1 EN/IEC 60947-5-5 EN/IEC 60947-5-1 EN/IEC 60947-5-4 EN/IEC 60947-1 JIS C8201-1
Product Certifications	UL listed DNV LROS (Lloyds register of shipping) BV GL CSA
Vibration Resistance	5 gn (f= 2…500 Hz) conforming to IEC 60068-2-6
Shock Resistance	30 gn (duration = 18 ms) for half sine wave acceleration conforming to IEC 60068-2-27 50 gn (duration = 11 ms) for half sine wave acceleration conforming to IEC 60068-2-27

Packing Units

Unit Type Of Package 1	PCE
Number Of Units In Package 1	1
Package 1 Height	5.700 cm
Package 1 Width	5.200 cm
Package 1 Length	3.300 cm
Package 1 Weight	23.000 g
Unit Type Of Package 2	S03
Number Of Units In Package 2	200
Package 2 Height	30.000 cm
Package 2 Width	30.000 cm
Package 2 Length	40.000 cm
Package 2 Weight	5.249 kg
Unit Type Of Package 3	P06
Number Of Units In Package 3	1600
Package 3 Height	75.000 cm
Package 3 Width	60.000 cm
Package 3 Length	80.000 cm
Package 3 Weight	52.604 kg

Contractual warranty

Warranty	18 months

Sustainability

Green Premium™ label is Schneider Electric's commitment to delivering products with best-in-class environmental performance. Green Premium promises compliance with the latest regulations, transparency on environmental impacts, as well as circular and low-CO_2 products.

Guide to assessing product sustainability is a white paper that clarifies global eco-label standards and how to interpret environmental declarations.

Learn more about Green Premium >

Guide to assess a product's sustainability >

Transparency RoHS/REACh

Well-being performance

Reach Free Of Svhc	
Toxic Heavy Metal Free	
Mercury Free	
Rohs Exemption Information	Yes

Certifications & Standards

Reach Regulation	REACh Declaration
Eu Rohs Directive	Pro-active compliance (Product out of EU RoHS legal scope) EU RoHS Declaration
China Rohs Regulation	China RoHS declaration
Environmental Disclosure	Product Environmental Profile
Circularity Profile	End of Life Information

Dimensions Drawings

Dimensions

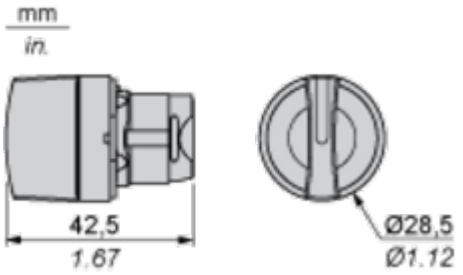

Mounting and Clearance

Panel Cut-out for Pushbuttons, Switches and Pilot Lights (Finished Holes, Ready for Installation)

Connection by Screw Clamp Terminals or Plug-in Connectors or on Printed Circuit Board

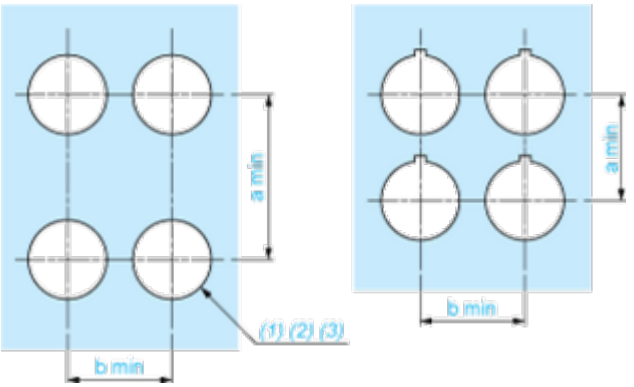

(1) Diameter on finished panel or support
(2) For selector switches and Emergency stop buttons, use of an anti-rotation plate type ZB5AZ902 is recommended.
(3) Ø22.5 mm recommended (Ø22.3 $_{0}^{+0.4}$) / Ø0.89 in. recommended (Ø0.88 in. $_{0}^{+0.016}$)

Connections	a in mm	a in in.	b in mm	b in in.
By screw clamp terminals or plug-in connector	40	1.57	30	1.18
By Faston connectors	45	1.77	32	1.26
On printed circuit board	30	1.18	30	1.18

Detail of Lug Recess

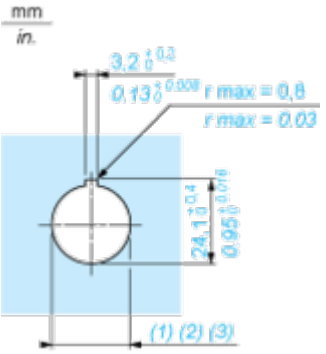

(1) Diameter on finished panel or support
(2) For selector switches and Emergency stop buttons, use of an anti-rotation plate type ZB5AZ902 is recommended.
(3) Ø22.5 mm recommended (Ø22.3 $_{0}^{+0.4}$) / Ø0.89 in. recommended (Ø0.88 in. $_{0}^{+0.016}$)

Pushbuttons, Switches and Pilot Lights for Printed Circuit Board Connection

Panel Cut-outs (Viewed from Installer's Side)

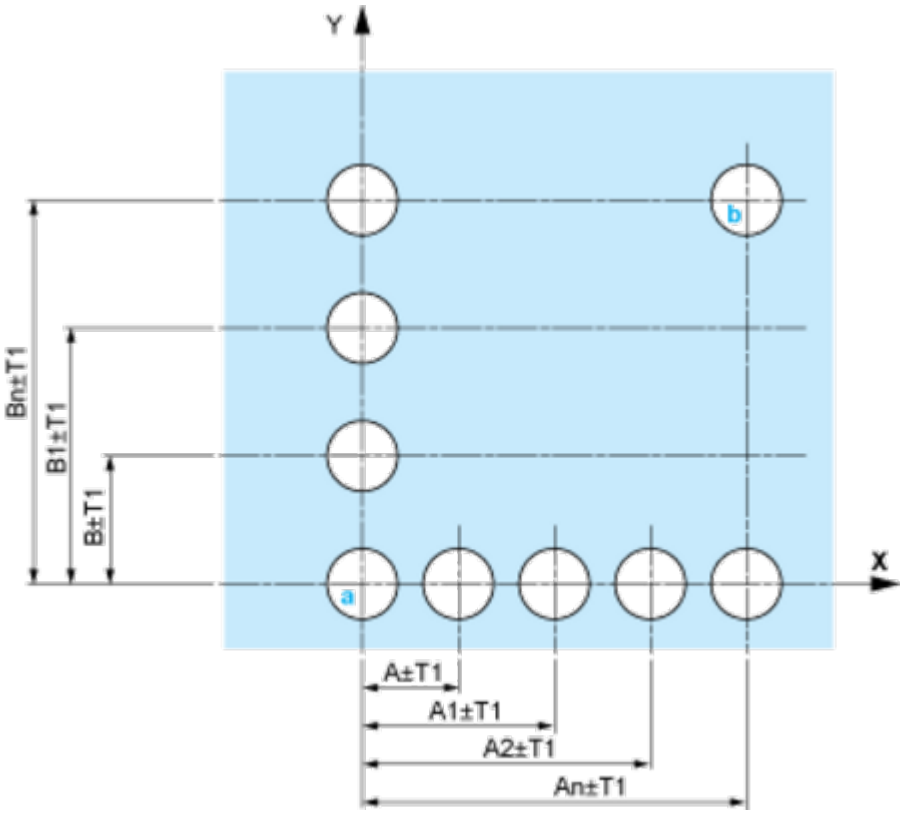

A: 30 mm min. / 1.18 in. min.
B: 40 mm min. / 1.57 in. min.

Printed Circuit Board Cut-outs (Viewed from Electrical Block Side)

Dimensions in mm

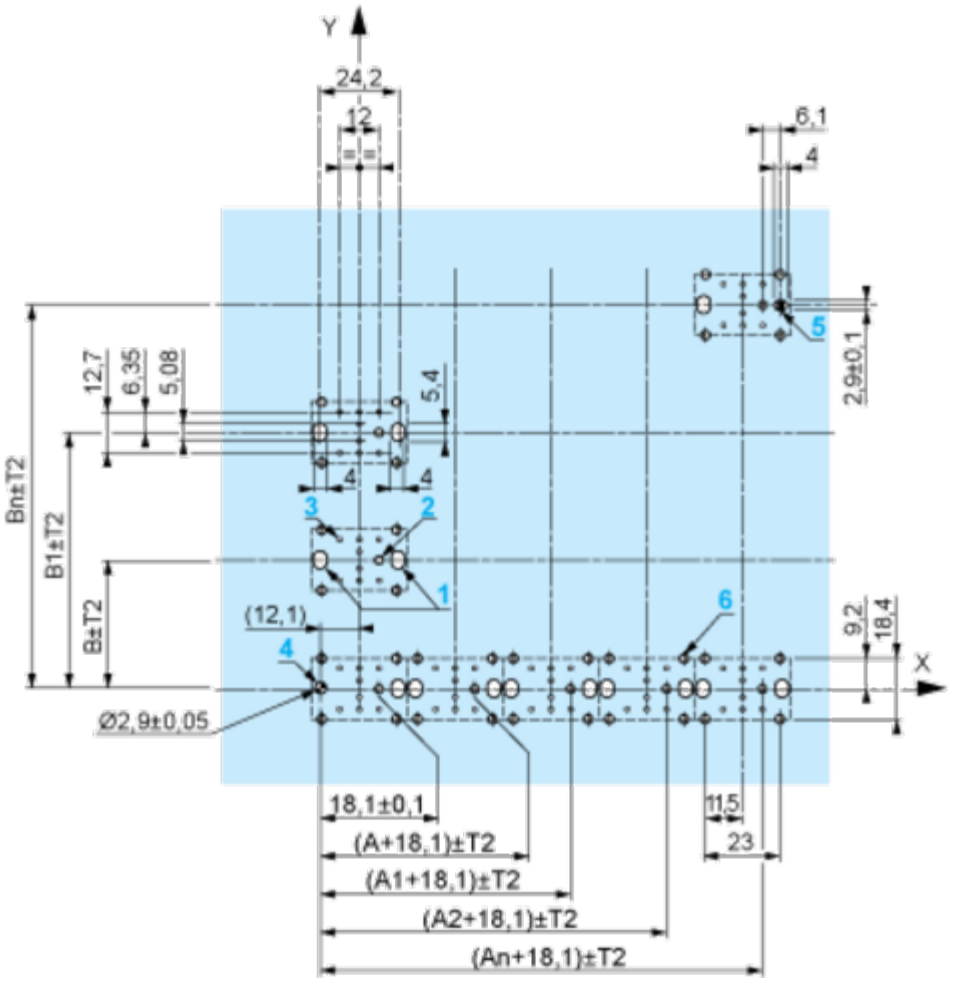

A: 30 mm min.
B: 40 mm min.
Dimensions in in.

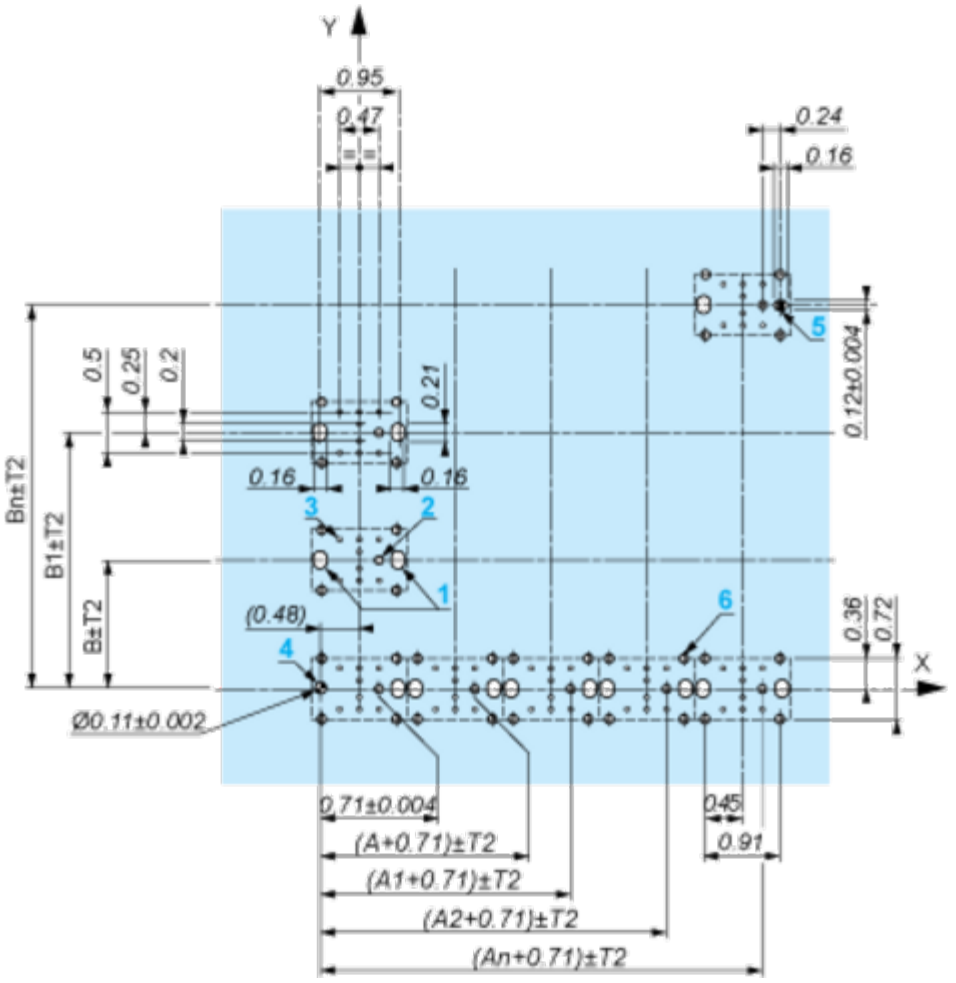

A: 1.18 in. min.
B: 1.57 in. min.

General Tolerances of the Panel and Printed Circuit Board

The cumulative tolerance must not exceed 0.3 mm / 0.012 in.: T1 + T2 = 0.3 mm max.

Installation Precautions

- Minimum thickness of circuit board: 1.6 mm / 0.06 in.
- Cut-out diameter: 22.4 mm ± 0.1 / 0.88 in. ± 0.004
- Orientation of body/fixing collar ZB5AZ009: ± 2°30' (excluding cut-outs marked **a** and **b**).
- Tightening torque of screws ZBZ006: 0.6 N.m (5.3 lbf.in) max.
- Allow for one ZB5AZ079 fixing collar/pillar and its fixing screws:
  - every 90 mm / 3.54 in. horizontally (X), and 120 mm / 4.72 in. vertically (Y).
  - with each selector switch head (ZB5AD•, ZB5AJ•, ZB5AG•).

The fixing centers marked **a** and **b** are diagonally opposed and must align with those marked **4** and **5**.

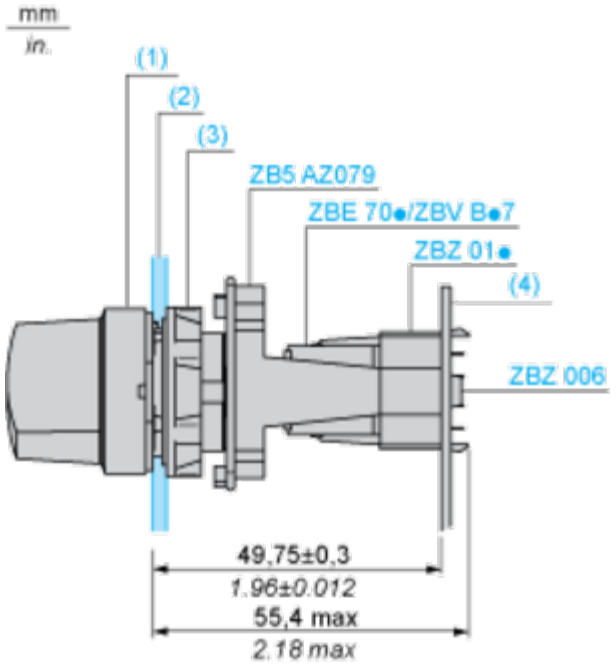

(1) Head ZB5AD•
(2) Panel
(2) Nut
(4) Printed circuit board

Mounting of Adapter (Socket) ZBZ01•

- **1** 2 elongated holes for ZBZ006 screw access
- **2** 1 hole Ø 2.4 mm ± 0.05 / 0.09 in. ± 0.002 for centring adapter ZBZ01•
- **3** 8 × Ø 1.2 mm / 0.05 in. holes
- **4** 1 hole Ø 2.9 mm ± 0.05 / 0.11 in. ± 0.002, for aligning the printed circuit board (with cut-out marked **a**)
- **5** 1 elongated hole for aligning the printed circuit board (with cut-out marked **b**)
- **6** 4 holes Ø 2.4 mm / 0.09 in. for clipping in adapter ZBZ01•

Dimensions An + 18.1 relate to the Ø 2.4 mm ± 0.05 / 0.09 in. ± 0.002 holes for centring adapter ZBZ01•.

Technical Description

Electrical Composition Corresponding to Code M3

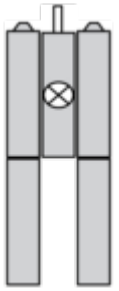

Electrical Composition Corresponding to Code M4

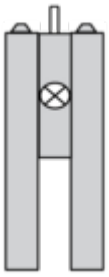

Electrical Composition Corresponding to Codes M6 and P2

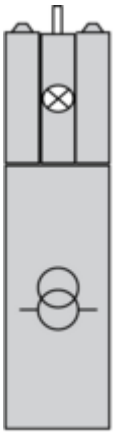

Electrical Composition Corresponding to Codes M5, M10, MF1, MR1 and MF2

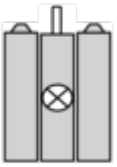

Legend

Single contact

Double contact

Light block

Possible location

Sequence of Contacts Fitted to 2-position Selector Switch Body

Position 315°

Push	Position	Top			
		Bottom			
	Location		Left		Right
	State		0		0
Contacts	N/O		open		open
	N/C		closed		closed

Position 45°

Push	Position	Top			
		Bottom			
	Location		Left		Right
	State		1		1
Contacts	N/O		closed		closed
	N/C		open		open