Product datasheet

Specifications

flush/flush double-headed pushbutton Ø22 without cap

Local distributor code:

393615021 ZB5AA79

EAN Code: 3389119043328

Main

Range Of Product	Harmony XB5
Product Or Component Type	Head for double-headed push-button
Device Short Name	ZB5
Bezel Material	Dark grey plastic
Mounting Diameter	22 mm
Head Type	Standard
Sale Per Indivisible Quantity	1
Shape Of Signaling Unit Head	Rectangular
Type Of Operator	spring return
Operator Profile	2 flush push-buttons
Operators Description	Black pushes without cap

Complementary

Cad Overall Width	30 mm
Cad Overall Height	50 mm
Cad Overall Depth	30 mm
Net Weight	0.023 kg
Colour Of Marking	Black marking when white caps White marking when green, red or black caps
Operator Profile	without cap
Mechanical Durability	1000000 cycles
Station Name	XALD 1 cut-out
Electrical Composition Code	C3 for <6 contacts using single blocks in front mounting C4 for <6 contacts using single and double blocks in front mounting C14 for <2 contacts using single blocks in front mounting SF2 for <2 contacts using single blocks in front mounting SR2 for <2 contacts using single blocks in rear mounting
Device Presentation	Basic element

Environment

Protective Treatment	TH
Ambient Air Temperature For Storage	-40…70 °C
Ambient Air Temperature For Operation	-25…70 °C
Electrical Shock Protection Class	Class II conforming to IEC 60536

Disclaimer: This documentation is not intended as a substitute for and is not to be used for determining suitability or reliability of these products for specific user applications

Ip Degree Of Protection	IP66 conforming to IEC 60529 IP69K conforming to IEC 60529
Nema Degree Of Protection	NEMA 13 NEMA 4X
Resistance To High Pressure Washer	7000000 Pa at 55 °C, distance : 0.1 m
Ik Degree Of Protection	IK03 conforming to IEC 50102
Standards	IEC 60947-5-1 CSA C22.2 No 14 IEC 60947-5-4 JIS C8201-5-1 IEC 60947-1 UL 508 JIS C8201-1
Product Certifications	LROS (Lloyds register of shipping) DNV GL UL listed BV CSA
Vibration Resistance	5 gn (f= 2…500 Hz) conforming to IEC 60068-2-6
Shock Resistance	30 gn (duration = 18 ms) for half sine wave acceleration conforming to IEC 60068-2-27 50 gn (duration = 11 ms) for half sine wave acceleration conforming to IEC 60068-2-27

Packing Units

Unit Type Of Package 1	PCE
Number Of Units In Package 1	1
Package 1 Height	4.8 cm
Package 1 Width	4.8 cm
Package 1 Length	3.0 cm
Package 1 Weight	24.0 g
Unit Type Of Package 2	BB1
Number Of Units In Package 2	5
Package 2 Height	5.5 cm
Package 2 Width	26.5 cm
Package 2 Length	3.3 cm
Package 2 Weight	125.0 g
Unit Type Of Package 3	S02
Number Of Units In Package 3	50
Package 3 Height	15.0 cm
Package 3 Width	30.0 cm
Package 3 Length	40.0 cm
Package 3 Weight	1.553 kg

Contractual warranty

Warranty	18 months

Sustainability

Green Premium™ label is Schneider Electric's commitment to delivering products with best-in-class environmental performance. Green Premium promises compliance with the latest regulations, transparency on environmental impacts, as well as circular and low-CO_2 products.

Guide to assessing product sustainability is a white paper that clarifies global eco-label standards and how to interpret environmental declarations.

Learn more about Green Premium >

Guide to assess a product's sustainability >

Transparency RoHS/REACh

Well-being performance

Reach Free Of Svhc	
Toxic Heavy Metal Free	
Mercury Free	
Rohs Exemption Information	Yes

Certifications & Standards

Reach Regulation	REACh Declaration
Eu Rohs Directive	Pro-active compliance (Product out of EU RoHS legal scope) EU RoHS Declaration
China Rohs Regulation	China RoHS declaration
Environmental Disclosure	Product Environmental Profile
Circularity Profile	End of Life Information

Dimensions Drawings

Dimensions

Without Boot

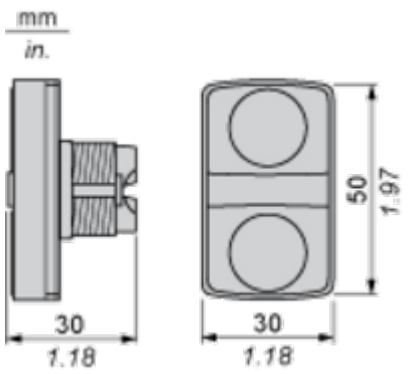

With Boot ZBA708

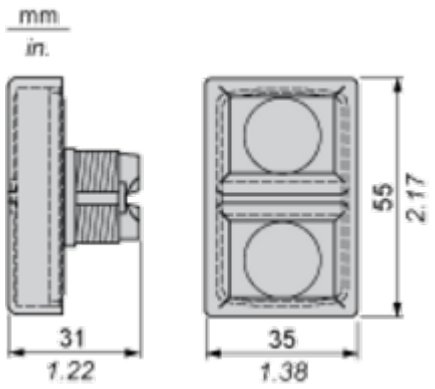

Mounting and Clearance

Panel Cut-out for Pushbuttons, Switches and Pilot Lights (Finished Holes, Ready for Installation)

Connection by Screw Clamp Terminals or Plug-in Connectors or on Printed Circuit Board

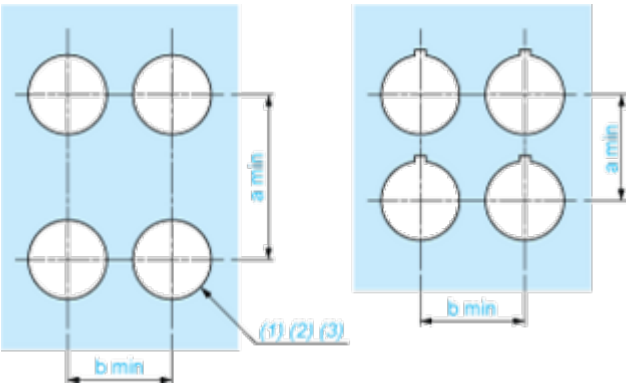

(1) Diameter on finished panel or support
(2) For selector switches and Emergency stop buttons, use of an anti-rotation plate type ZB5AZ902 is recommended.
(3) Ø22.5 mm recommended (Ø22.3 $_{0}^{+0.4}$) / Ø0.89 in. recommended (Ø0.88 in. $_{0}^{+0.016}$)

Connections	a in mm	a in in.	b in mm	b in in.
By screw clamp terminals or plug-in connector	40	1.57	30	1.18
By Faston connectors	45	1.77	32	1.26
On printed circuit board	30	1.18	30	1.18

Detail of Lug Recess

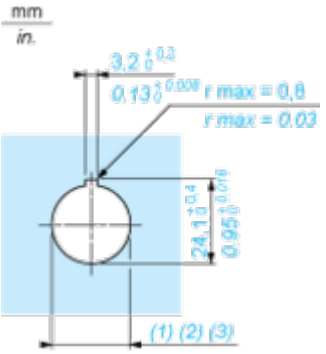

(1) Diameter on finished panel or support
(2) For selector switches and Emergency stop buttons, use of an anti-rotation plate type ZB5AZ902 is recommended.
(3) Ø22.5 mm recommended (Ø22.3 $_{0}^{+0.4}$) / Ø0.89 in. recommended (Ø0.88 in. $_{0}^{+0.016}$)

Pushbuttons, Switches and Pilot Lights for Printed Circuit Board Connection

Panel Cut-outs (Viewed from Installer's Side)

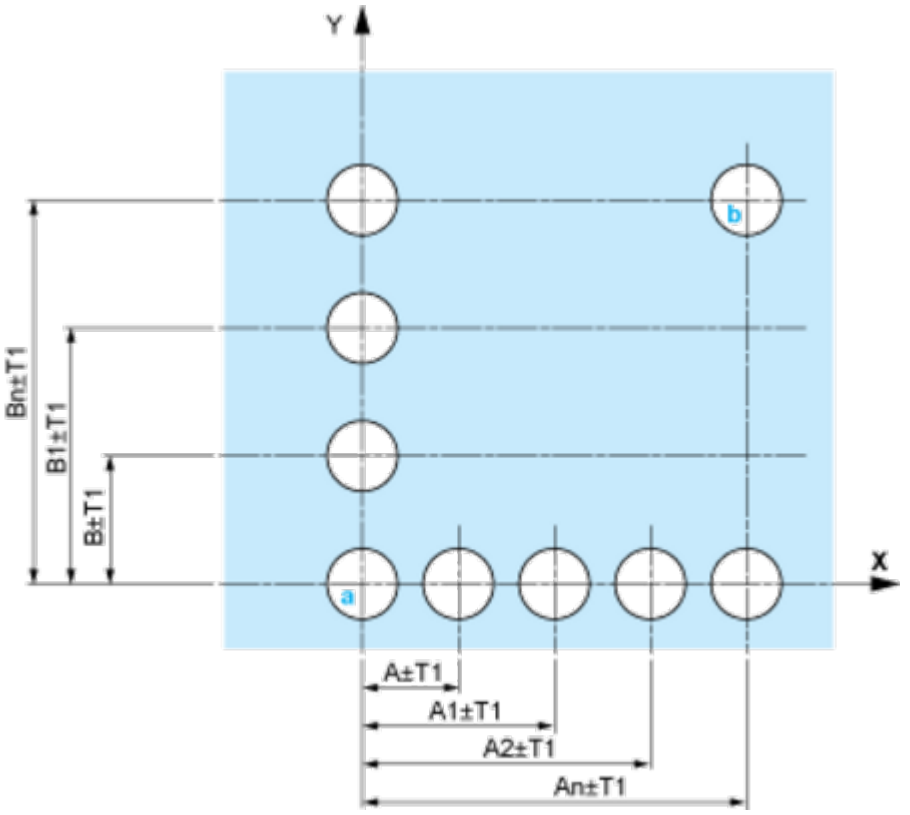

A: 30 mm min. / 1.18 in. min.
B: 40 mm min. / 1.57 in. min.

Printed Circuit Board Cut-outs (Viewed from Electrical Block Side)

Dimensions in mm

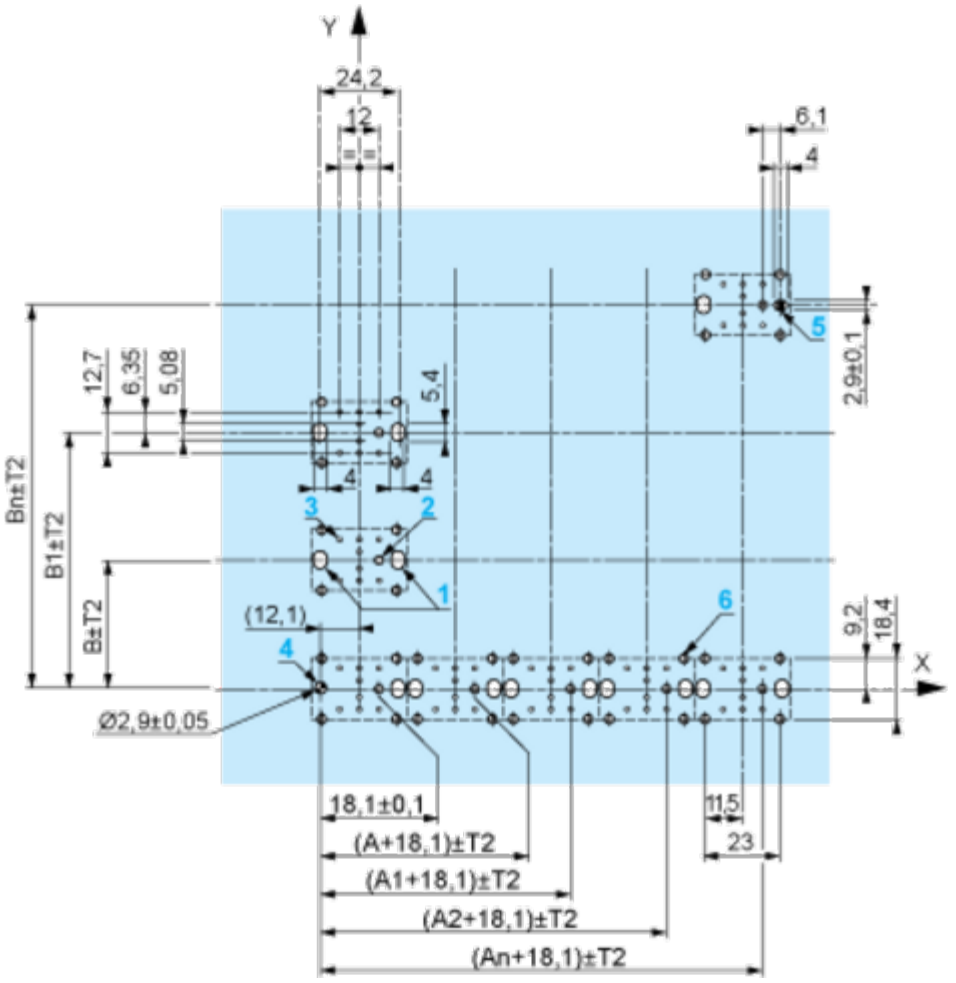

A: 30 mm min.
B: 40 mm min.
Dimensions in in.

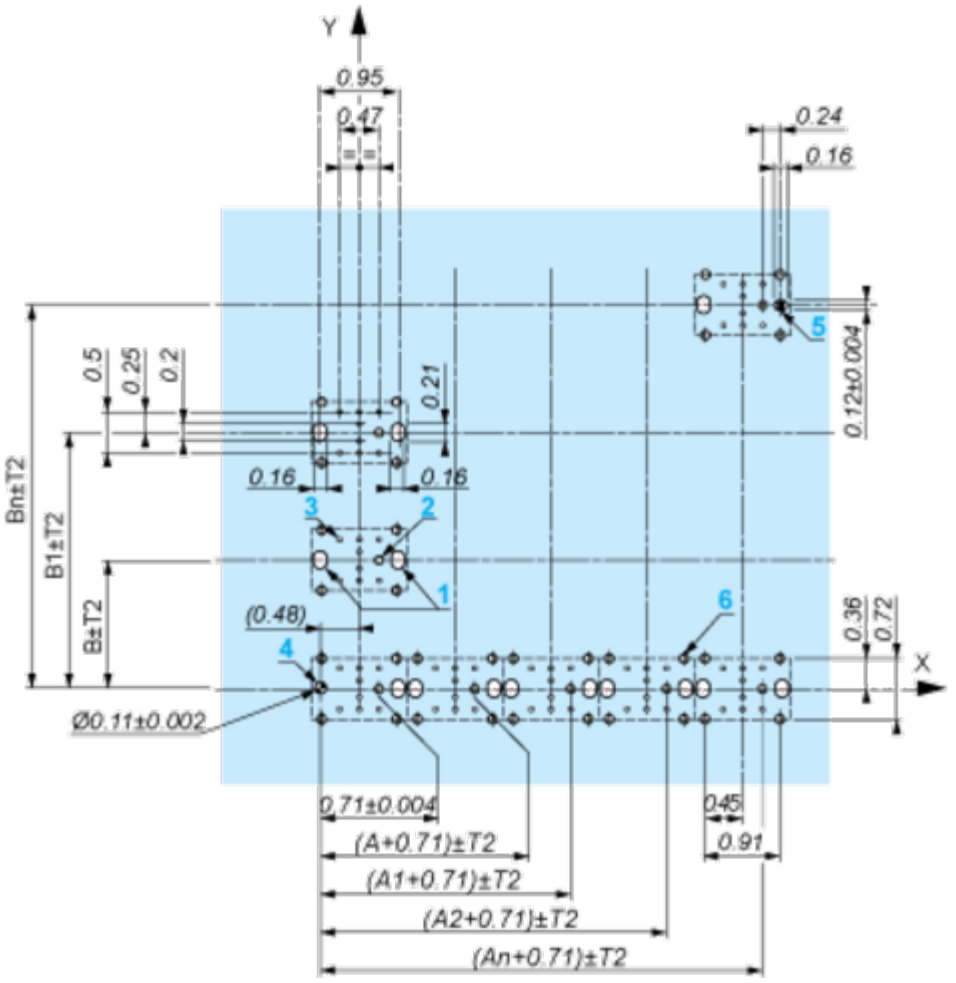

A: 1.18 in. min.
B: 1.57 in. min.

General Tolerances of the Panel and Printed Circuit Board

The cumulative tolerance must not exceed 0.3 mm / 0.012 in.: T1 + T2 = 0.3 mm max.

Installation Precautions

- Minimum thickness of circuit board: 1.6 mm / 0.06 in.
- Cut-out diameter: 22.4 mm ± 0.1 / 0.88 in. ± 0.004
- Orientation of body/fixing collar ZB5AZ009: ± 2°30' (excluding cut-outs marked **a** and **b**).
- Tightening torque of screws ZBZ006: 0.6 N.m (5.3 lbf.in) max.
- Allow for one ZB5AZ079 fixing collar/pillar and its fixing screws:
  - every 90 mm / 3.54 in. horizontally (X), and 120 mm / 4.72 in. vertically (Y).
  - with each selector switch head (ZB5AD•, ZB5AJ•, ZB5AG•).

The fixing centers marked **a** and **b** are diagonally opposed and must align with those marked **4** and **5**.

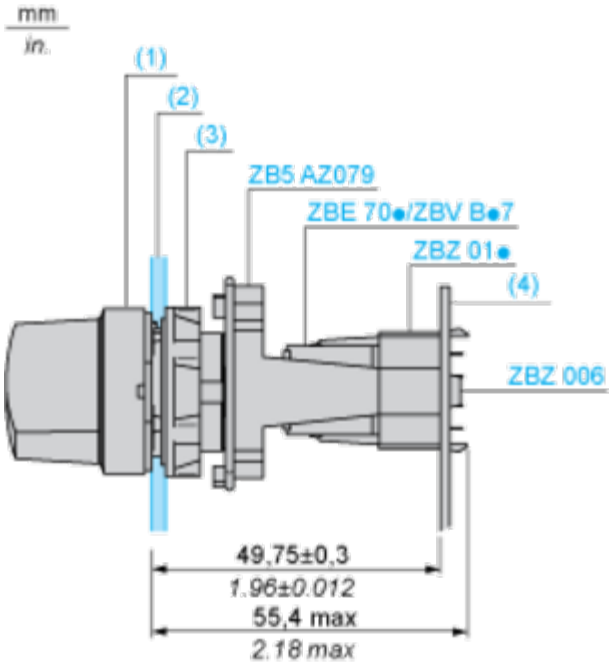

(1) Head ZB5AD•
(2) Panel
(2) Nut
(4) Printed circuit board

Mounting of Adapter (Socket) ZBZ01•

- **1** 2 elongated holes for ZBZ006 screw access
- **2** 1 hole Ø 2.4 mm ± 0.05 / 0.09 in. ± 0.002 for centring adapter ZBZ01•
- **3** 8 × Ø 1.2 mm / 0.05 in. holes
- **4** 1 hole Ø 2.9 mm ± 0.05 / 0.11 in. ± 0.002, for aligning the printed circuit board (with cut-out marked **a**)
- **5** 1 elongated hole for aligning the printed circuit board (with cut-out marked **b**)
- **6** 4 holes Ø 2.4 mm / 0.09 in. for clipping in adapter ZBZ01•

Dimensions An + 18.1 relate to the Ø 2.4 mm ± 0.05 / 0.09 in. ± 0.002 holes for centring adapter ZBZ01•.

Technical Description

Electrical Composition Corresponding to Code C3

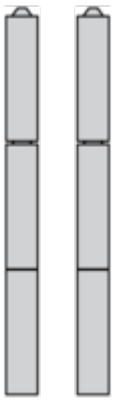

Electrical Composition Corresponding to Code C4

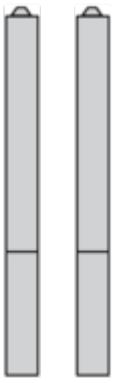

Electrical Composition Corresponding to Codes C14, SF2 and SR2

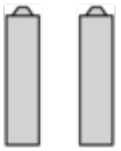

Legend

Single contact

Double contact

Light block

Possible location