Product datasheet

Specifications

Green Premium™

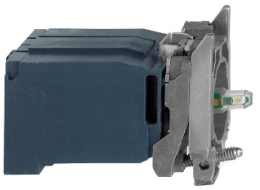

orange light block with body/fixing collar with BA9s LED bulb 110...120V

ZB4BV3D5

Discontinued on: 1 Jul 2020

Discontinued

EAN Code: 3389110892567

Main

Range Of Product	Harmony XB4
Product Or Component Type	Complete body/light block assembly
Device Short Name	ZB4
Fixing Collar Material	Zamak
Sale Per Indivisible Quantity	1
Connections - Terminals	Screw clamp terminals, <= 2 x 1.5 mm² with cable end Screw clamp terminals, >= 1 x 0.22 mm² without cable end
Light Source	LED
Bulb Base	BA 9s
Light Block Supply	Via integral transformer 1.2 VA 6 V
Light Source Colour	Orange
[Us] Rated Supply Voltage	110...120 V AC at 50/60 Hz

Complementary

Cad Overall Width	30 mm
Cad Overall Height	47 mm
Cad Overall Depth	60 mm
Terminals Description Iso N°1	(X1-X2)PL
Net Weight	0.134 kg
Tightening Torque	0.8…1.2 N.m conforming to EN 60947-1
Shape Of Screw Head	Cross compatible with Philips no 1 screwdriver Cross compatible with pozidriv No 1 screwdriver Slotted compatible with flat Ø 4 mm screwdriver Slotted compatible with flat Ø 5.5 mm screwdriver
[Ui] Rated Insulation Voltage	600 V (pollution degree 3) conforming to EN 60947-1
[Uimp] Rated Impulse Withstand Voltage	6 kV conforming to EN 60947-1
Signalling Type	Steady
Mounting Of Block	Front mounting
Electrical Composition Code	P4 M9

Environment

Protective Treatment	TH

Disclaimer: This documentation is not intended as a substitute for and is not to be used for determining suitability or reliability of these products for specific user applications

Ambient Air Temperature For Storage	-40…70 °C
Ambient Air Temperature For Operation	-40…70 °C
Electrical Shock Protection Class	Class I conforming to IEC 60536
Ip Degree Of Protection	IP20
Standards	EN/IEC 60947-5-1 UL 508 JIS C8201-5-1 EN/IEC 60947-1 EN/IEC 60947-5-4 CSA C22.2 No 14 EN/IEC 60947-5-5 JIS C8201-1
Product Certifications	UL listed LROS (Lloyds register of shipping) DNV CSA BV GL
Vibration Resistance	5 gn (f= 2…500 Hz) conforming to IEC 60068-2-6
Shock Resistance	30 gn (duration = 18 ms) for half sine wave acceleration conforming to IEC 60068-2-27 50 gn (duration = 11 ms) for half sine wave acceleration conforming to IEC 60068-2-27

Contractual warranty

Warranty	18 months

Sustainability

Green Premium™ label is Schneider Electric's commitment to delivering products with best-in-class environmental performance. Green Premium promises compliance with the latest regulations, transparency on environmental impacts, as well as circular and low-CO_2 products.

Guide to assessing product sustainability is a white paper that clarifies global eco-label standards and how to interpret environmental declarations.

Learn more about Green Premium >

Guide to assess a product's sustainability >

Transparency RoHS/REACh

Well-being performance

Mercury Free

Rohs Exemption Information	Yes

Certifications & Standards

Reach Regulation	REACh Declaration
Eu Rohs Directive	Pro-active compliance (Product out of EU RoHS legal scope)
China Rohs Regulation	China RoHS declaration
Environmental Disclosure	Product Environmental Profile
Weee	The product must be disposed on European Union markets following specific waste collection and never end up in rubbish bins
Circularity Profile	End of Life Information

Dimensions Drawings

Dimensions

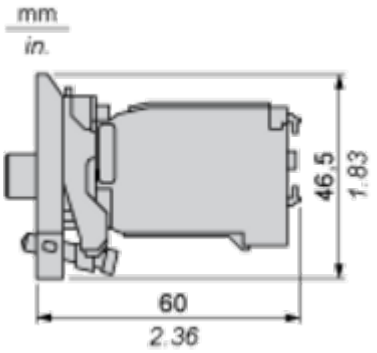

Mounting and Clearance

Panel Cut-out for Pushbuttons, Switches and Pilot Lights (Finished Holes, Ready for Installation)

Connection by Screw Clamp Terminals or Plug-in Connectors or on Printed Circuit Board	Connection by Faston Connectors
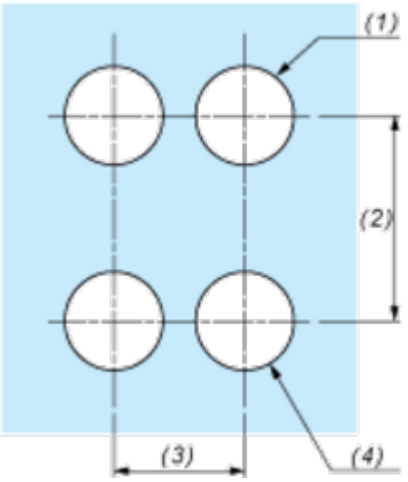	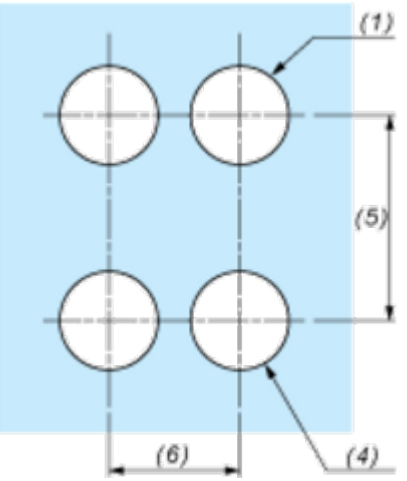

(1) Diameter on finished panel or support
(2) 40 mm min. / 1.57 in. min.
(3) 30 mm min. / 1.18 in. min.
(4) Ø 22.5 mm / 0.89 in. recommended (Ø 22.3 mm $_{0}^{+0.4}$ / 0.88 in. $_{0}^{+0.016}$)
(5) 45 mm min. / 1.78 in. min.
(6) 32 mm min. / 1.26 in. min.