Product datasheet

Specifications

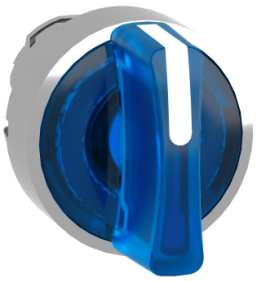

Head for illuminated selector switch, Harmony XB4, chromium metal, blue handle, 22mm, universal LED, 3 positions,

Local distributor code:

237119159 ZB4BK1563

Important message: Viktig information: en förändring i utseendet kan observeras på produkten, men detta påverkar inte dess användning i termer av funktion och säkerhet. Detta gör den kompatibel med våra Universal LED-block
EAN Code: 3389110891010

Main

Range Of Product	Harmony XB4
Product Or Component Type	Head for illuminated selector switch
Product Compatibility	Universal LED
Device Short Name	ZB4
Bezel Material	Chromium plated metal
Head Type	Standard
Mounting Diameter	22.5 mm
Sale Per Indivisible Quantity	1
Shape Of Signaling Unit Head	Round
Type Of Operator	To centre spring return
Operator Profile	Blue standard handle
Operator Position Information	3 positions +/- 45°
Cap/Operator Or Lens Colour	Blue

Complementary

Cad Overall Width	29 mm
Cad Overall Height	29 mm
Cad Overall Depth	43 mm
Net Weight	0.036 kg
Resistance To High Pressure Washer	7000000 Pa at 55 °C, distance : 0.1 m
Mechanical Durability	500000 cycles
Electrical Composition Code	M3 for <4 contacts using single blocks in front mounting with integral LED M6 for <2 contacts using single blocks in front mounting with integral LED and transformer M10 for <2 contacts using single blocks in front mounting with integral LED M4 for <4 contacts using single and double blocks in front mounting with integral LED
Device Presentation	Basic element

Environment

Protective Treatment	TH

Disclaimer: This documentation is not intended as a substitute for and is not to be used for determining suitability or reliability of these products for specific user applications

Ambient Air Temperature For Storage	-40…70 °C
Ambient Air Temperature For Operation	-40…70 °C
Overvoltage Category	Class I conforming to IEC 60536
Ip Degree Of Protection	IP66 conforming to IEC 60529 IP67 IP69 IP69K
Nema Degree Of Protection	NEMA 13 NEMA 4X
Ik Degree Of Protection	IK04 conforming to IEC 50102
Standards	UL 508 IEC 60947-1 CSA C22.2 No 14 JIS C8201-5-1 IEC 60947-5-1 IEC 60947-5-4 IEC 60947-5-5 JIS C8201-1
Product Certifications	LROS (Lloyds register of shipping) UL listed BV CSA GL DNV
Vibration Resistance	5 gn (f= 2…500 Hz) conforming to IEC 60068-2-6
Shock Resistance	30 gn (duration = 18 ms) for half sine wave acceleration conforming to IEC 60068-2-27 50 gn (duration = 11 ms) for half sine wave acceleration conforming to IEC 60068-2-27

Packing Units

Unit Type Of Package 1	PCE
Number Of Units In Package 1	1
Package 1 Height	3.600 cm
Package 1 Width	5.400 cm
Package 1 Length	5.900 cm
Package 1 Weight	41.700 g
Unit Type Of Package 2	S03
Number Of Units In Package 2	250
Package 2 Height	30.000 cm
Package 2 Width	30.000 cm
Package 2 Length	40.000 cm
Package 2 Weight	10.902 kg

Contractual warranty

Warranty	18 months

Sustainability

Green Premium™ label is Schneider Electric's commitment to delivering products with best-in-class environmental performance. Green Premium promises compliance with the latest regulations, transparency on environmental impacts, as well as circular and low-CO_2 products.

Guide to assessing product sustainability is a white paper that clarifies global eco-label standards and how to interpret environmental declarations.

Learn more about Green Premium >

Guide to assess a product's sustainability >

Transparency RoHS/REACh

Well-being performance

Reach Free Of Svhc	
Toxic Heavy Metal Free	
Mercury Free	
Rohs Exemption Information	Yes

Certifications & Standards

Reach Regulation	REACh Declaration
Eu Rohs Directive	Pro-active compliance (Product out of EU RoHS legal scope) EU RoHS Declaration
China Rohs Regulation	China RoHS declaration
Environmental Disclosure	Product Environmental Profile
Circularity Profile	End of Life Information

Dimensions Drawings

Dimensions

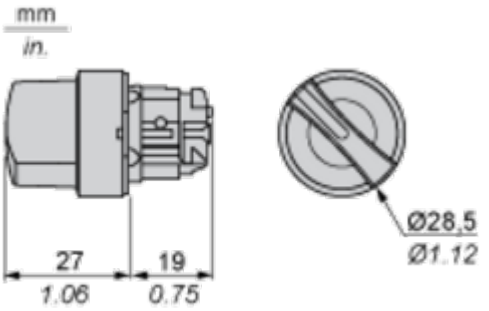

Mounting and Clearance

Panel Cut-out for Pushbuttons, Switches and Pilot Lights (Finished Holes, Ready for Installation)

Connection by Screw Clamp Terminals or Plug-in Connectors or on Printed Circuit Board	Connection by Faston Connectors
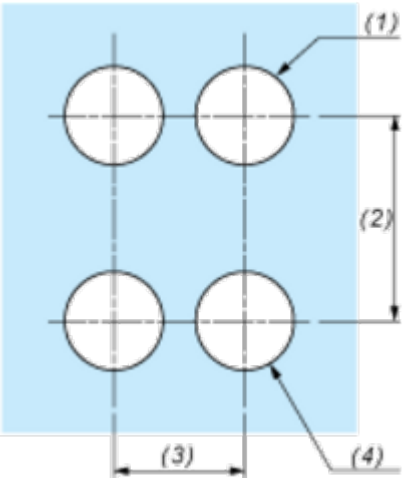	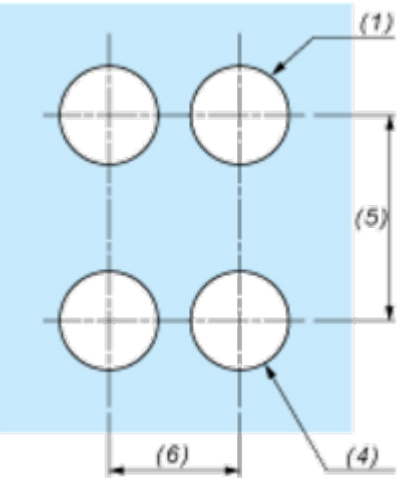

(1) Diameter on finished panel or support
(2) 40 mm min. / 1.57 in. min.
(3) 30 mm min. / 1.18 in. min.
(4) Ø 22.5 mm / 0.89 in. recommended (Ø 22.3 mm $_{0}^{+0.4}$ / 0.88 in. $_{0}^{+0.016}$)
(5) 45 mm min. / 1.78 in. min.
(6) 32 mm min. / 1.26 in. min.

Pushbuttons, Switches and Pilot Lights for Printed Circuit Board Connection

Panel Cut-outs (Viewed from Installer's Side)

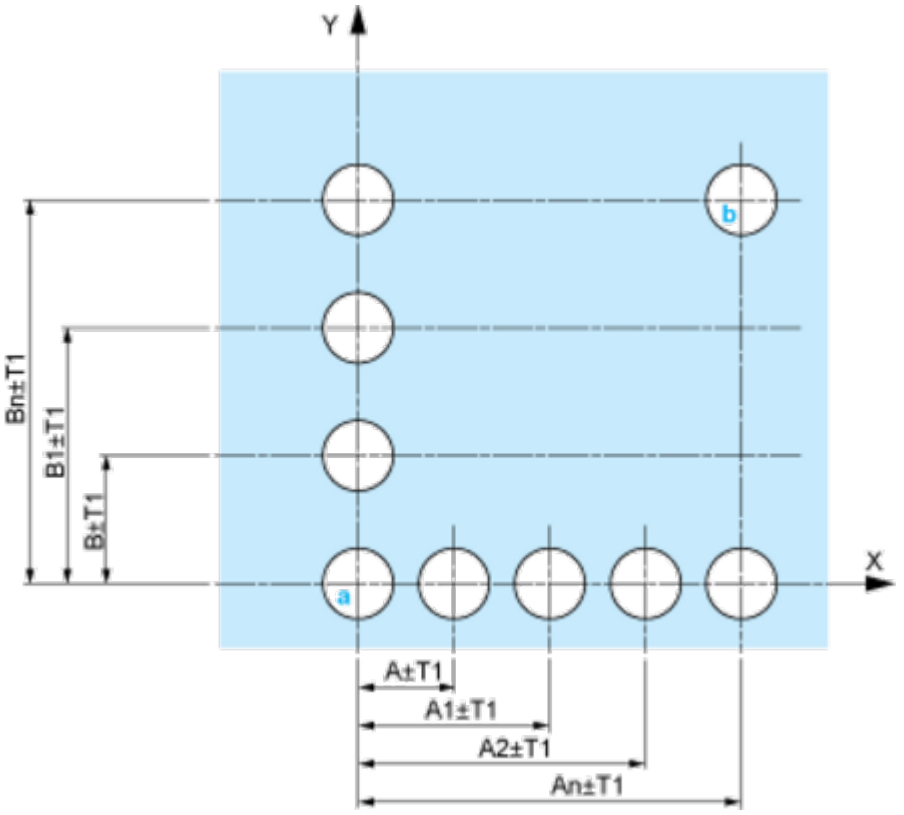

A: 30 mm min. / 1.18 in. min.
B: 40 mm min. / 1.57 in. min.

Printed Circuit Board Cut-outs (Viewed from Electrical Block Side)

Dimensions in mm

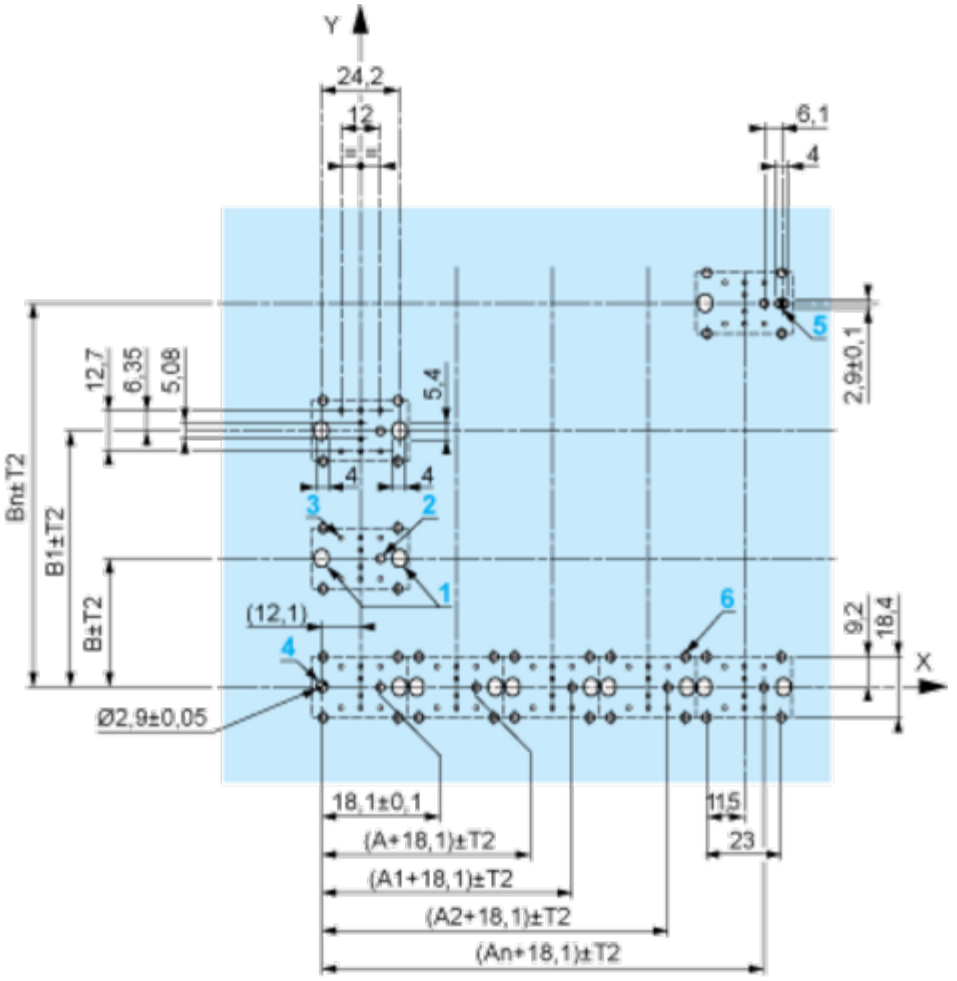

A: 30 mm min.
B: 40 mm min.
Dimensions in in.

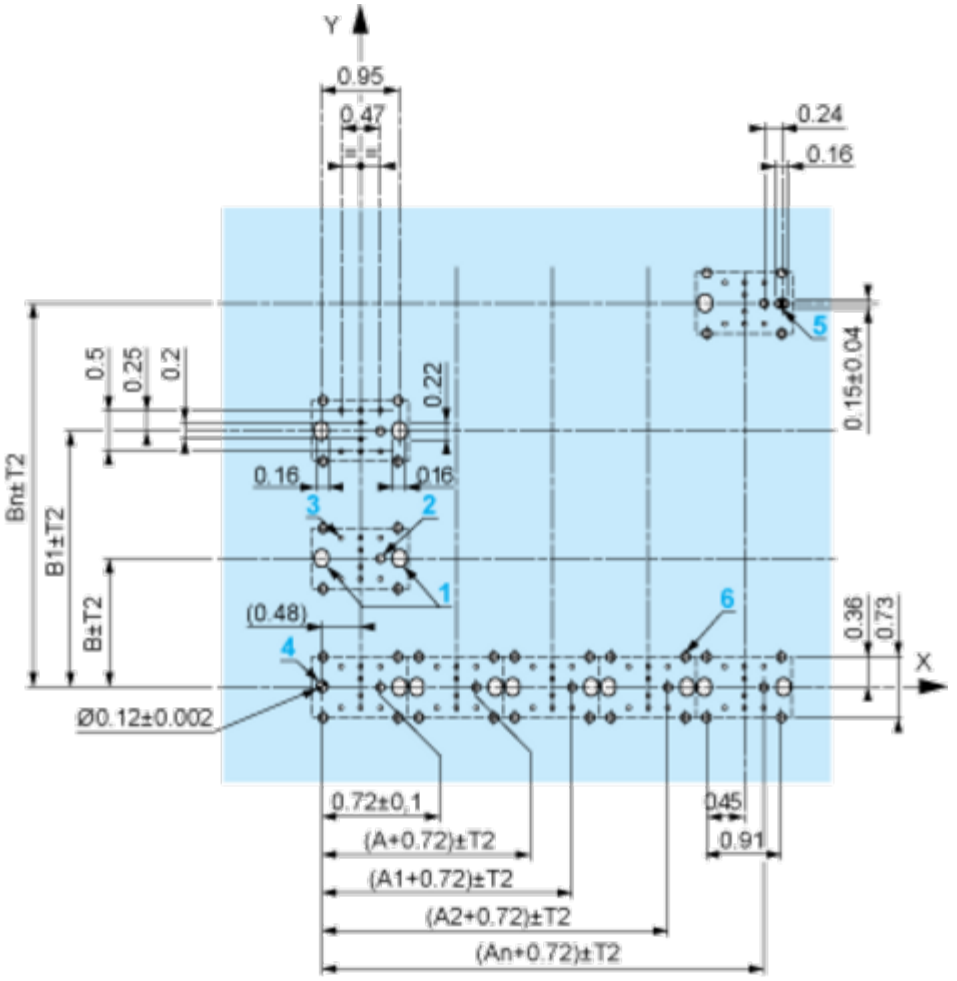

A: 1.18 in. min.
B: 1.57 in. min.

General Tolerances of the Panel and Printed Circuit Board

The cumulative tolerance must not exceed 0.3 mm / 0.012 in: T1 + T2 = 0.3 mm max.

Installation Precautions

- Minimum thickness of circuit board: 1.6 mm / 0.06 in.
- Cut-out diameter: 22.4 mm ± 0.1 / 0.88 in. ± 0.004
- Orientation of body/fixing collar ZB4 BZ009: ± 2°30' (excluding cut-outs marked **a** and **b**).
- Tightening torque of screws ZBZ 006: 0.6 N.m (5.3 lbf.in) max.
- Allow for one ZB4 BZ079 fixing collar/pillar and its fixing screws:
  - every 90 mm / 3.54 in. horizontally (X), and 120 mm / 4.72 in. vertically (Y).
  - with each selector switch head (ZB4 BD•, ZB4 BJ•, ZB4 BG•).

The fixing centers marked **a** and **b** are diagonally opposed and must align with those marked **4** and **5**.

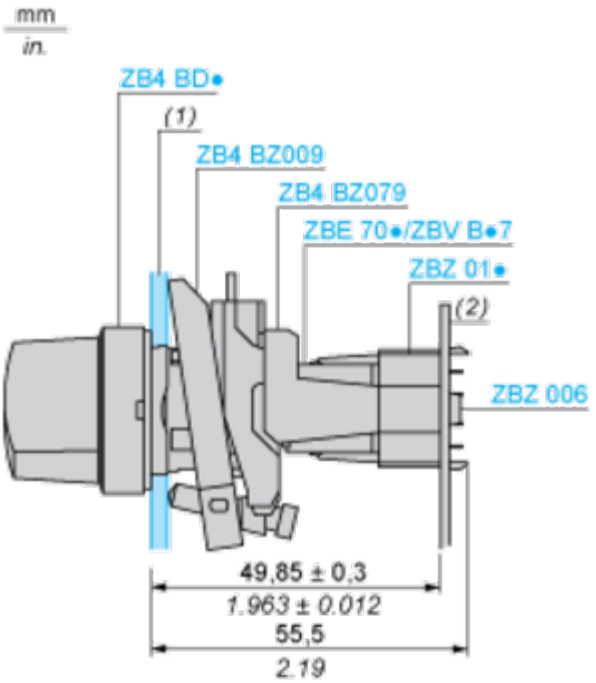

(1) Panel
(2) Printed circuit board

Mounting of Adapter (Socket) ZBZ 01•

- **1** 2 elongated holes for ZBZ 006 screw access
- **2** 1 hole Ø 2.4 mm ± 0.05 / 0.09 in. ± 0.002 for centring adapter ZBZ 01•
- **3** 8 × Ø 1.2 mm / 0.05 in. holes
- **4** 1 hole Ø 2.9 mm ± 0.05 / 0.11 in. ± 0.002, for aligning the printed circuit board (with cut-out marked **a**)
- **5** 1 elongated hole for aligning the printed circuit board (with cut-out marked **b**)
- **6** 4 holes Ø 2.4 mm / 0.09 in. for clipping in adapter ZBZ 01•

Dimensions An + 18.1 relate to the Ø 2.4 mm ± 0.05 / 0.09 in. ± 0.002 holes for centring adapter ZBZ 01•.

Technical Description

Electrical Composition Corresponding to Code M3

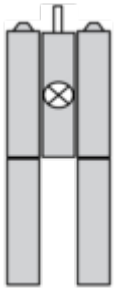

Electrical Composition Corresponding to Code M4

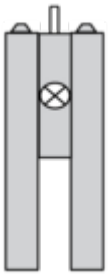

Electrical Composition Corresponding to Codes M6 and P2

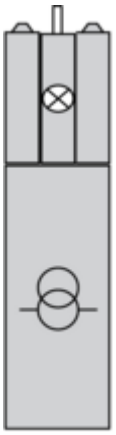

Electrical Composition Corresponding to Codes M5, M10, MF1, MR1 and MF2

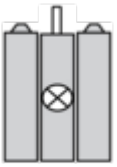

Legend

Single contact

Double contact

Light block

Possible location

Sequence of Contacts Fitted to 3-position Selector Switch Body

Position 315°

Push	Position	Top			
		Bottom			
	Location		Left		Right
	State		1		0
Contacts	N/O		closed		open
	N/C		open		closed

Position 0°

Push	Position	Top			
		Bottom			
	Location		Left		Right
	State		0		0
Contacts	N/O		open		open
	N/C		closed		closed

Position 45°

Push	Position	Top			
		Bottom			
	Location		Left		Right
	State		0		1
Contacts	N/O		open		closed
	N/C		closed		open