Product datasheet

Specifications

Green Premium™

Illuminated beacon with buzzer, red, Ø100, 70...90 dB, integral LED, 100...230 V AC

Local distributor code:

403036668 XVR3M04S

EAN Code: 3606480611896

Main

Range Of Product	Harmony XVR
Product Or Component Type	Beacon
Device Short Name	XVR3
Beacon Or Indicator Bank Unit Type	LED unit
Sound Signalling	Buzzer: 70…90 dB at 1 m
Mounting Diameter	100 mm
Light Source	LED, red
Device Application	Bulldozer Automated guided vehicle (AGV) Forklift

Complementary

Signalling Type	Rotating Buzzer Blinking Flashing
Assembly Style	Ready assembled
Material	PC (polycarbonate): lenses PBT (polybutylene terephthalate) + PC (polycarbonate): body EPDM (ethylene propylene diene monomer): base
[Us] Rated Supply Voltage	100...230 V AC
[Ue] Rated Operational Voltage	90...253 V AC
Inrush Current	0.5 A
Power Consumption In W	3.2 W
Marking	CE
Installation Direction	Upright indoor Sideways indoor Inverted indoor Upright outdoor
Electrical Insulation Class	Class II
Current Consumption	500 mA
Length	100 mm
Width	100 mm
Height	139 mm
Net Weight	0.538 kg

Disclaimer: This documentation is not intended as a substitute for and is not to be used for determining suitability or reliability of these products for specific user applications

Environment

Product Certifications	CCC
Ambient Air Temperature For Operation	-10…50 °C
Ambient Air Temperature For Storage	-20…70 °C
Relative Humidity	35…85 % without condensation
Vibration Resistance	4.6 gn (sideways) 4.6 gn (inverted) 4.6 gn (upright)
Ip Degree Of Protection	IP23 (sideways) IP23 (inverted) IP23 (upright)

Packing Units

Unit Type Of Package 1	PCE
Number Of Units In Package 1	1
Package 1 Height	13.5 cm
Package 1 Width	13.85 cm
Package 1 Length	18.5 cm
Package 1 Weight	660 g
Unit Type Of Package 2	S04
Number Of Units In Package 2	8
Package 2 Height	30 cm
Package 2 Width	40 cm
Package 2 Length	60 cm
Package 2 Weight	6.4 kg
Unit Type Of Package 3	P06
Number Of Units In Package 3	32
Package 3 Height	71.5 cm
Package 3 Width	68 cm
Package 3 Length	80 cm
Package 3 Weight	29.8 kg

Contractual warranty

Warranty	18 months

Sustainability

Green Premium™ label is Schneider Electric's commitment to delivering products with best-in-class environmental performance. Green Premium promises compliance with the latest regulations, transparency on environmental impacts, as well as circular and low-CO_2 products.

Guide to assessing product sustainability is a white paper that clarifies global eco-label standards and how to interpret environmental declarations.

Learn more about Green Premium >

Guide to assess a product's sustainability >

Transparency RoHS/REACh

Well-being performance

Toxic Heavy Metal Free	
Mercury Free	
Rohs Exemption Information	Yes

Certifications & Standards

Reach Regulation	REACh Declaration
Eu Rohs Directive	Pro-active compliance (Product out of EU RoHS legal scope) EU RoHS Declaration
China Rohs Regulation	China RoHS declaration
Environmental Disclosure	Product Environmental Profile
Circularity Profile	End of Life Information

Dimensions Drawings

Dimensions

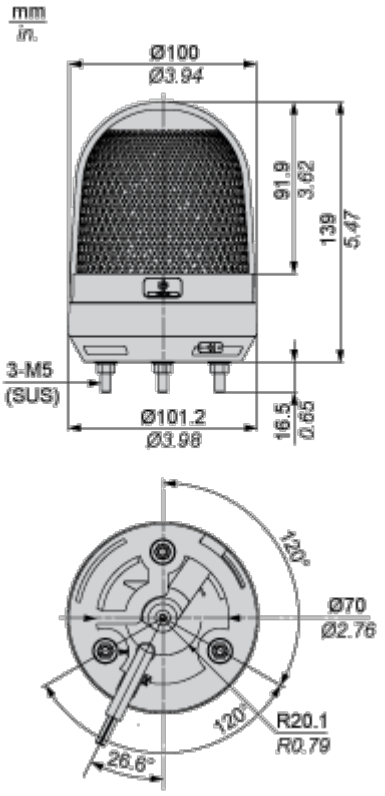

Mounting and Clearance

Panel Cut-out

Straight wiring

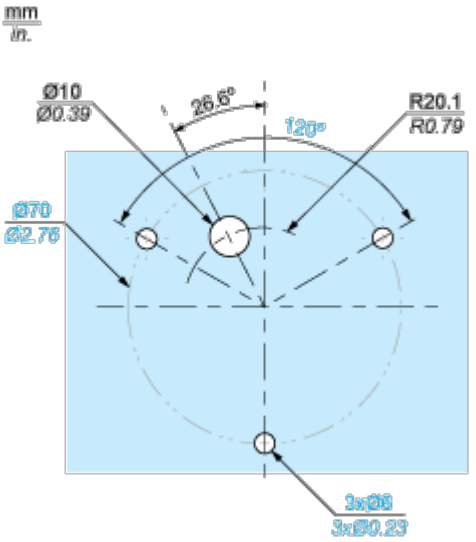

Side wiring

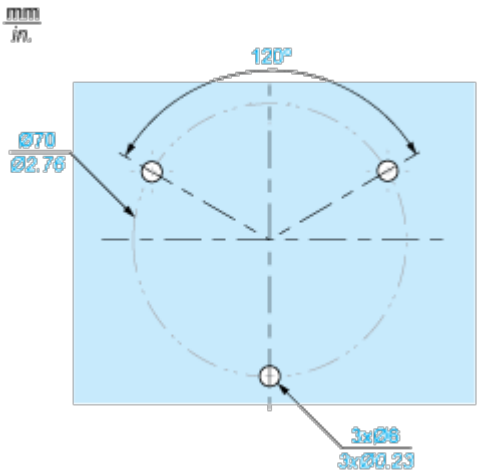

Connections and Schema

Wiring Diagram

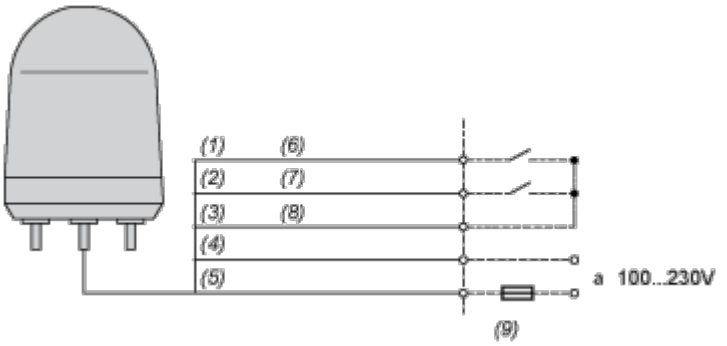

(1) Green

(2) Red

(3) Yellow

(4) Black

(5) White

(6) LED

(7) Buzzer

(8) Com

(9) Fuse(Rated Current>2A)