Product datasheet

Specifications

black complete selector switch Ø16 3-position stay put 1NO+1NC Ronis 200

Local distributor code:

398127776 XB6AGH5B

EAN Code: 3389110764673

Main

Range Of Product	Harmony XB6
Product Or Component Type	Complete selector switch
Device Short Name	XB6
Bezel Material	Plastic
Mounting Diameter	16 mm
Sale Per Indivisible Quantity	1
Operating Position	Any position
Shape Of Signaling Unit Head	Round
Type Of Operator	stay put
Operator Profile	key switch
Operator Position Information	3 positions 70°
Type Of Keylock	Ronis 200
Key Withdrawal Position	In any position
Contacts Type And Composition	1 NO + 1 NC
Contact Operation	Slow-break

Complementary

Cad Overall Width	18 mm
Cad Overall Height	18 mm
Cad Overall Depth	80 mm
Terminals Description Iso N°1	(13-14)NO (21-22)NC
Net Weight	0.036 kg
Positive Opening	With conforming to EN/IEC 60947-5-1 appendix K
Mechanical Durability	200000 cycles
Connections - Terminals	Faston connectors, connection size: 2.8 x 0.5 mm
Contacts Material	Silver alloy (Ag/Ni)
Short-Circuit Protection	6 A cartridge fuse type gG
[Ui] Rated Insulation Voltage	250 V (pollution degree 3) conforming to EN/IEC 60947-1
[Uimp] Rated Impulse Withstand Voltage	4 kV conforming to EN/IEC 60947-1

Disclaimer: This documentation is not intended as a substitute for and is not to be used for determining suitability or reliability of these products for specific user applications

[Ie] Rated Operational Current	3 A at 120 V, AC-15, B300 conforming to EN/IEC 60947-5-1 1.5 A at 240 V, AC-15, B300 conforming to EN/IEC 60947-5-1 0.1 A at 250 V, DC-13, R300 conforming to EN/IEC 60947-5-1 0.22 A at 125 V, DC-13, R300 conforming to EN/IEC 60947-5-1
Electrical Durability	1000000 cycles, AC-15 at 230 V, operating rate <3600 cyc/h, load factor: 0.5 conforming to EN/IEC 60947-5-1 appendix C 1000000 cycles, DC-13 at 230 V, operating rate <3600 cyc/h, load factor: 0.5 conforming to EN/IEC 60947-5-1 appendix C
Electrical Reliability	Λ = 10exp(-8) at 5 V and 1 mA with confidence level of 90 % conforming to EN 60947-5-4

Environment

Protective Treatment	TC
Ambient Air Temperature For Storage	-40…70 °C
Ambient Air Temperature For Operation	-25…70 °C
Electrical Shock Protection Class	Class II conforming to IEC 61140
Ip Degree Of Protection	IP65 conforming to IEC 60529
Standards	EN/IEC 60947-5-1 EN/IEC 60947-5-5 UL 508 EN/IEC 60947-1 JIS C8201-5-1 CSA C22.2 No 14 JIS C 852 JIS C8201-1
Product Certifications	GOST CCC CSA UL
Vibration Resistance	+/- 3 mm (f= 2…500 Hz) conforming to IEC 60068-2-6 5 gn (f= 2…500 Hz) conforming to IEC 60068-2-6
Shock Resistance	30 gn (duration = 18 ms) for half sine wave acceleration conforming to IEC 60068-2-27 50 gn (duration = 11 ms) for half sine wave acceleration conforming to IEC 60068-2-27

Packing Units

Unit Type Of Package 1	PCE
Number Of Units In Package 1	1
Package 1 Height	2.0 cm
Package 1 Width	11.0 cm
Package 1 Length	11.0 cm
Package 1 Weight	32.0 g
Unit Type Of Package 2	S01
Number Of Units In Package 2	50
Package 2 Height	15.0 cm
Package 2 Width	15.0 cm
Package 2 Length	40.0 cm
Package 2 Weight	1.795 kg

Contractual warranty

Warranty	18 months

Sustainability

Green Premium™ label is Schneider Electric's commitment to delivering products with best-in-class environmental performance. Green Premium promises compliance with the latest regulations, transparency on environmental impacts, as well as circular and low-CO_2 products.

Guide to assessing product sustainability is a white paper that clarifies global eco-label standards and how to interpret environmental declarations.

Learn more about Green Premium >

Guide to assess a product's sustainability >

RoHS/REACh

Well-being performance

Mercury Free

Rohs Exemption Information	Yes

Certifications & Standards

Reach Regulation	REACh Declaration
Eu Rohs Directive	Pro-active compliance (Product out of EU RoHS legal scope)
China Rohs Regulation	China RoHS declaration
Weee	The product must be disposed on European Union markets following specific waste collection and never end up in rubbish bins

Dimensions Drawings

Circular Head Key Switch

Dimensions

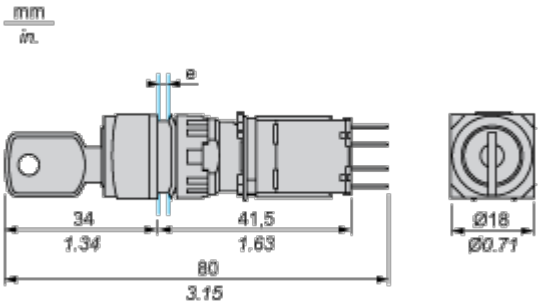

e panel thickness 1 to 6 mm/0.03 to 0.23 in.

Mounting and Clearance

Panel Cut-out
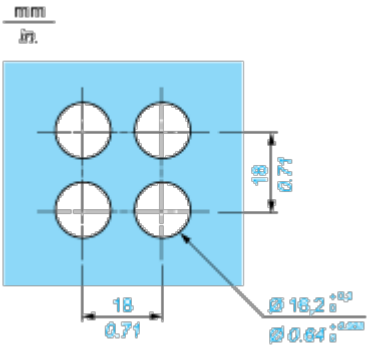
For Square or Circular Head