Product datasheet

Specifications

Green Premium™

Pack 22mm XB5R programble receiver AC/DC

Local distributor code:

398126463 XB5RFA02

EAN Code: 3606480334450

Main

Range Of Product	Harmony XB5R
Product Or Component Type	Wireless and batteryless package
Device Short Name	XB5R
Head Material	Plastic
Frequency	2405 MHz for transmitter 2405 MHz for receiver
Emission Class	5M00G7W
Antenna Type	Omnidirectional

Complementary

Control Type	Wireless and batteryless push-button Ø 22 mm assembled on fixing collar
Type Of Receiver	Programmable receiver (2 relays)
[Us] Rated Supply Voltage	24...240 V AC/DC 50/60 Hz
Kit Composition	1 transmitter 1 set of caps 1 receiver 1 fixing collars 1 diameter: 22 mm 1 push-button head diameter: 22 mm
Status Led	1 LED green for power ON 2 LEDs green for relay ON 2 LEDs green for function mode 1 LED green and yellow for reception signal
Communication Port Protocol	Zigbee conforming to IEEE 802.15.4
Max Power Consumption In W	1 mW
Number Of Channels	1
Modulation Technique	O-QPSK
Bandwidth	5 MHz
Antenna Gain	0 dBi
Customizable	No
Compatibility Code	XB5R

Environment

Product Certifications	UL CCC GOST CSA C-Tick

Disclaimer: This documentation is not intended as a substitute for and is not to be used for determining suitability or reliability of these products for specific user applications

Marking	CE
Standards	CSA C22.2 No 14 IEC 60947-5-1 UL 508 IEC 60947-1
Radio Agreement	SRRC RSS ARIB T66 FCC ICASA ANATEL

Packing Units

Unit Type Of Package 1	PCE
Number Of Units In Package 1	1
Package 1 Height	9.300 cm
Package 1 Width	10.500 cm
Package 1 Length	10.800 cm
Package 1 Weight	207.000 g
Unit Type Of Package 2	S03
Number Of Units In Package 2	16
Package 2 Height	30.000 cm
Package 2 Width	30.000 cm
Package 2 Length	40.000 cm
Package 2 Weight	3.850 kg

Contractual warranty

Warranty	18 months

Sustainability

Green Premium™ label is Schneider Electric's commitment to delivering products with best-in-class environmental performance. Green Premium promises compliance with the latest regulations, transparency on environmental impacts, as well as circular and low-CO_2 products.

Guide to assessing product sustainability is a white paper that clarifies global eco-label standards and how to interpret environmental declarations.

Learn more about Green Premium >

Guide to assess a product's sustainability >

Transparency RoHS/REACh

Well-being performance

Mercury Free

Rohs Exemption Information	Yes

Certifications & Standards

Reach Regulation	REACh Declaration
Eu Rohs Directive	Pro-active compliance (Product out of EU RoHS legal scope)
China Rohs Regulation	China RoHS declaration
Environmental Disclosure	Product Environmental Profile
Weee	The product must be disposed on European Union markets following specific waste collection and never end up in rubbish bins
Circularity Profile	End of Life Information

Dimensions Drawings

Programmable Receiver

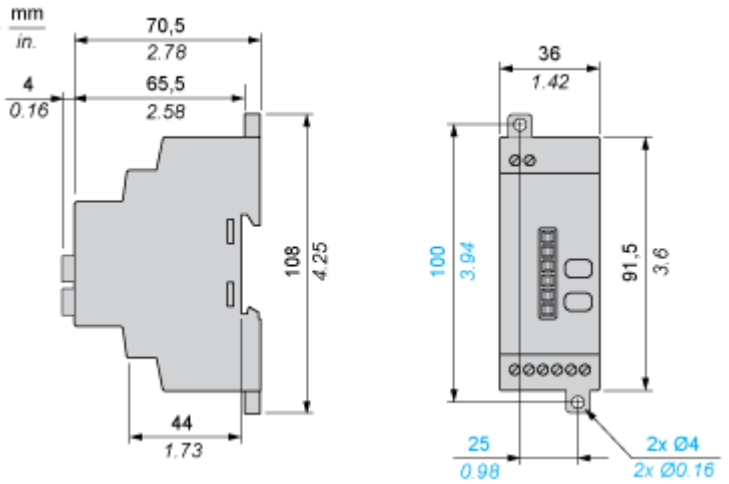

Wireless and Batteryless Pushbutton - Transmitter

With Plastic Pushbutton without Cap

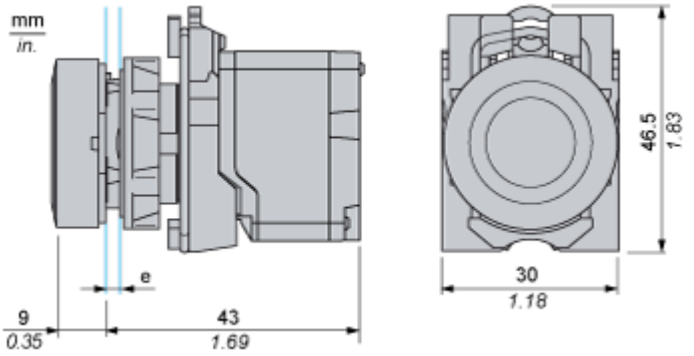

e: panel thickness 1 to 6 mm / 0.039 to 0.24 in.

Mounting and Clearance

Receiver Clearance

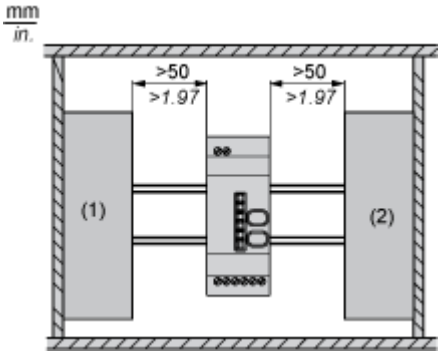

(1) Drive

(2) Power Supply or PLC

Receiver Mounting

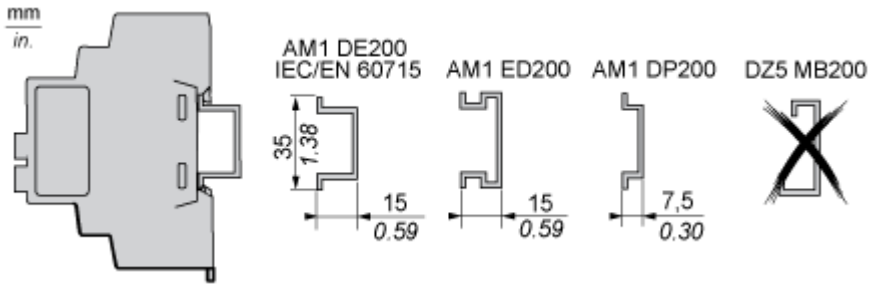

Connections and Schema

Programmable Receiver

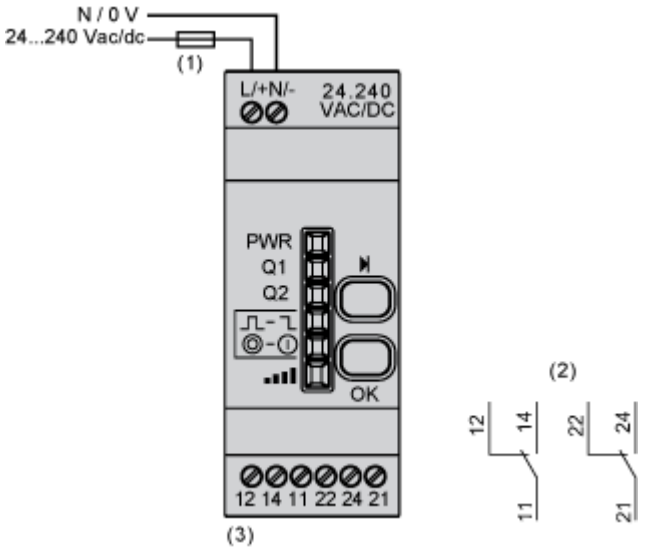

(1) 500 mA

(2) Output contacts

(3) Imax = 3 A