Product datasheet

Specifications

Green Premium™

green complete pilot light Ø22 plain lens with BA9s bulb 110...120V

Local distributor code:

23705913 XB4BV33

EAN Code: 3389110887228

Main

Range Of Product	Harmony XB4
Product Or Component Type	Pilot light
Device Short Name	XB4
Bezel Material	Chromium plated metal
Fixing Collar Material	Zamak
Head Type	Standard
Mounting Diameter	22.5 mm
Sale Per Indivisible Quantity	1
Shape Of Signaling Unit Head	Round
Cap/Operator Or Lens Colour	Green
Operator Additional Information	With plain lens
Light Source	Incandescent
Bulb Base	BA 9s
Light Block Supply	Via integral transformer 1.2 VA 6 V
[Us] Rated Supply Voltage	110...120 V AC at 50/60 Hz

Complementary

Height	47 mm
Width	30 mm
Depth	78 mm
Terminals Description Iso N°1	(X1-X2)PL
Net Weight	0.152 kg
Resistance To High Pressure Washer	7000000 Pa at 55 °C, distance : 0.1 m
Connections - Terminals	Screw clamp terminals, <= 2 x 1.5 mm² with cable end conforming to IEC 60947-1 Screw clamp terminals, 1 x 0.22...2 x 2.5 mm² without cable end conforming to IEC 60947-1
[Ui] Rated Insulation Voltage	600 V (pollution degree 3) conforming to IEC 60947-1
[Uimp] Rated Impulse Withstand Voltage	6 kV conforming to IEC 60947-1
Signalling Type	Steady
Device Presentation	Complete product

Environment

Disclaimer: This documentation is not intended as a substitute for and is not to be used for determining suitability or reliability of these products for specific user applications

Protective Treatment	TH
Ambient Air Temperature For Storage	-40…70 °C
Ambient Air Temperature For Operation	-40…55 °C
Electrical Shock Protection Class	Class I conforming to IEC 60536
Ip Degree Of Protection	IP66 conforming to IEC 60529 IP67 IP69 IP69K
Nema Degree Of Protection	NEMA 13 NEMA 4X
Ik Degree Of Protection	IK06 conforming to IEC 50102
Standards	JIS C8201-5-1 IEC 60947-5-1 UL 508 IEC 60947-5-4 IEC 60947-5-5 CSA C22.2 No 14 IEC 60947-1 JIS C8201-1
Product Certifications	CSA UL listed
Vibration Resistance	5 gn (f= 12…500 Hz) conforming to IEC 60068-2-6
Shock Resistance	30 gn (duration = 18 ms) for half sine wave acceleration conforming to IEC 60068-2-27 50 gn (duration = 11 ms) for half sine wave acceleration conforming to IEC 60068-2-27

Packing Units

Unit Type Of Package 1	PCE
Number Of Units In Package 1	1
Package 1 Height	3.2 cm
Package 1 Width	8.6 cm
Package 1 Length	5.0 cm
Package 1 Weight	146.0 g
Unit Type Of Package 2	BB1
Number Of Units In Package 2	5
Package 2 Height	8.8 cm
Package 2 Width	26.5 cm
Package 2 Length	3.4 cm
Package 2 Weight	730.0 g
Unit Type Of Package 3	S02
Number Of Units In Package 3	50
Package 3 Height	15.0 cm
Package 3 Width	30.0 cm
Package 3 Length	40.0 cm
Package 3 Weight	7.64 kg

Contractual warranty

Warranty	18 months

Sustainability

Green Premium™ label is Schneider Electric's commitment to delivering products with best-in-class environmental performance. Green Premium promises compliance with the latest regulations, transparency on environmental impacts, as well as circular and low-CO_2 products.

Guide to assessing product sustainability is a white paper that clarifies global eco-label standards and how to interpret environmental declarations.

Learn more about Green Premium >

Guide to assess a product's sustainability >

Transparency RoHS/REACh

Well-being performance

Mercury Free

Rohs Exemption Information	Yes

Certifications & Standards

Reach Regulation	REACh Declaration
Eu Rohs Directive	Pro-active compliance (Product out of EU RoHS legal scope)
China Rohs Regulation	China RoHS declaration
Environmental Disclosure	Product Environmental Profile
Weee	The product must be disposed on European Union markets following specific waste collection and never end up in rubbish bins
Circularity Profile	End of Life Information

Dimensions Drawings

Dimensions

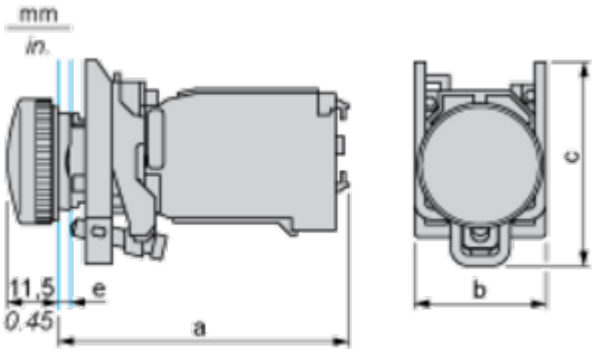

e : clamping thickness: 1 to 6 mm / 0.04 to 0.24 in.

a in mm	a in in.	b in mm	b in in.	c in mm	c in in.
66	2.60	30	1.18	46.5	1.83

Mounting and Clearance

Panel Cut-out for Pushbuttons, Switches and Pilot Lights (Finished Holes, Ready for Installation)

Connection by Screw Clamp Terminals or Plug-in Connectors or on Printed Circuit Board	Connection by Faston Connectors
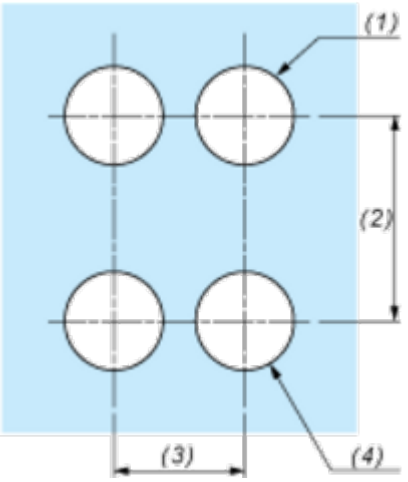	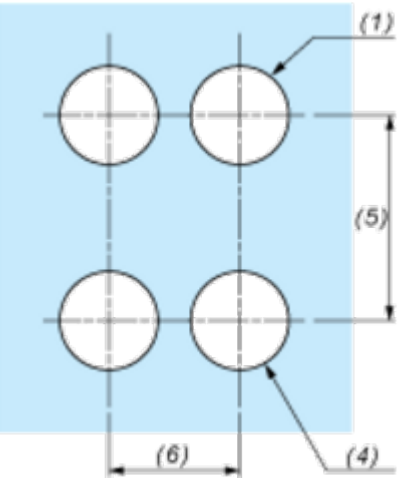

(1) Diameter on finished panel or support
(2) 40 mm min. / 1.57 in. min.
(3) 30 mm min. / 1.18 in. min.
(4) Ø 22.5 mm / 0.89 in. recommended (Ø 22.3 mm $_{0}^{+0.4}$ / 0.88 in. $_{0}^{+0.016}$)
(5) 45 mm min. / 1.78 in. min.
(6) 32 mm min. / 1.26 in. min.