Product datasheet

Specifications

Green Premium™

Discontinued

empty control station - XAP-M - zinc alloy - without opening

Local distributor code:

22489052 XAPM34H29

Discontinued on: 18 Apr 2024

EAN Code: 3389118115408

Main

Range Of Product	Harmony XAP
Product Or Component Type	Die-cast empty control station
Device Short Name	XAPM
Product Front Plate Size	80 x 175 mm
Usable Depth	74.5 mm
Number Of Cut-Out	Undrilled
Colour Of Base Of Enclosure	Blue
Colour Of Cover	Blue
Material	Zinc alloy
Cable Entry	1 hole with blanking plug for ISO 429248 cable gland, clamping capacity: 25 mm 1 hole without blanking plug for ISO 429248 cable gland, clamping capacity: 25 mm
Product Mounting	Flush mounting
Ip Degree Of Protection	IP65 conforming to IEC 60529

Complementary

Net Weight	1.16 kg

Environment

Protective Treatment	TC
Ambient Air Temperature For Storage	-40…70 °C
Ambient Air Temperature For Operation	-40…70 °C
Electrical Shock Protection Class	Class I conforming to IEC 60536 Class I conforming to NF C 20-030

Packing Units

Unit Type Of Package 1	PCE
Number Of Units In Package 1	1
Package 1 Height	8.5 cm
Package 1 Width	12 cm
Package 1 Length	18.5 cm
Package 1 Weight	1.338 kg

Disclaimer: This documentation is not intended as a substitute for and is not to be used for determining suitability or reliability of these products for specific user applications

Contractual warranty

Warranty	18 months

Sustainability

Green Premium™ label is Schneider Electric's commitment to delivering products with best-in-class environmental performance. Green Premium promises compliance with the latest regulations, transparency on environmental impacts, as well as circular and low-CO_2 products.

Guide to assessing product sustainability is a white paper that clarifies global eco-label standards and how to interpret environmental declarations.

Learn more about Green Premium >

Guide to assess a product's sustainability >

Transparency RoHS/REACh

Well-being performance

- Reach Free Of Svhc
- Toxic Heavy Metal Free
- Mercury Free
- Rohs Exemption Information — Yes

Certifications & Standards

Reach Regulation	REACh Declaration
Eu Rohs Directive	Pro-active compliance (Product out of EU RoHS legal scope) EU RoHS Declaration
China Rohs Regulation	China RoHS declaration
Environmental Disclosure	Product Environmental Profile
Circularity Profile	No need of specific recycling operations

Dimensions Drawings

Dimensions and Fixing

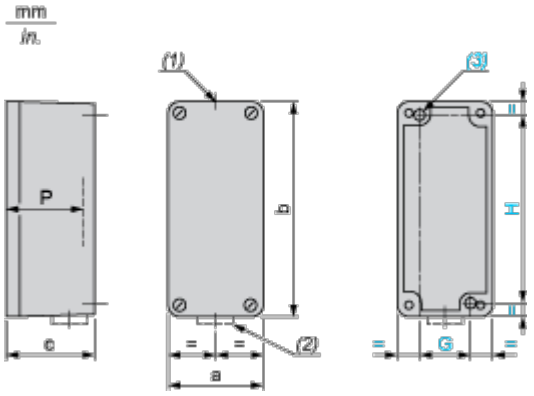

(1) 1 hole, without blanking plug, for cable gland with 18 mm/0.71 in. maximum clamping capacity

(2) 1 hole, with blanking plug (protrusion 6 mm/0.24 in.), for cable gland with 18 mm/0.71 in. maximum clamping capacity

(3) 2 x Ø 5.6 mm/0.22 in. holes, depth 20 mm/0.79 in.

a		b		c		G		H		P	
mm	in.	mm	in.	mm	in.	mm	in.	mm	in.	mm	in.
80	3.15	175	6.89	77	3.03	50	1.97	160	6.30	74.5	2.93