Product datasheet

Specifications

drilled front plate - XAP-E - metal - 5 horizontal openings

Local distributor code:

388805875 XAPE305

EAN Code: 3389110628081

Main

Range Of Product	Harmony XAP
Product Or Component Type	Front plate with fixing screws
Device Short Name	XAPE
Product Destination	For Ø 22 mm control and signalling units
Product Front Plate Size	72 x 204 mm
Number Of Cut-Out	5 cut-outs
Material	Anodised aluminium
Device Mounting	Flush
Ip Degree Of Protection	IP65 conforming to IEC 60529 IP657 conforming to NF C 20-010
Resistance To Chemical Agents	Good resistant to acetone Good resistant to alcohols Good resistant to chloride and fluoride solvents Good resistant to diluted mineral acids Good resistant to oils and petrol Good resistant to organic acids Good resistant to salts

Complementary

Net Weight	0.135 kg

Environment

Protective Treatment	TH TC
Ambient Air Temperature For Storage	-40…70 °C
Ambient Air Temperature For Operation	-25…70 °C
Overvoltage Category	Class I conforming to IEC 60536 Class I conforming to NF C 20-030

Packing Units

Unit Type Of Package 1	PCE
Number Of Units In Package 1	1
Package 1 Height	1.8 cm
Package 1 Width	13.9 cm
Package 1 Length	23.0 cm
Package 1 Weight	160.0 g

Disclaimer: This documentation is not intended as a substitute for and is not to be used for determining suitability or reliability of these products for specific user applications

Unit Type Of Package 2	S02
Number Of Units In Package 2	21
Package 2 Height	15.0 cm
Package 2 Width	30.0 cm
Package 2 Length	40.0 cm
Package 2 Weight	3.669 kg

Contractual warranty

Warranty	18 months

Sustainability

Green Premium™ label is Schneider Electric's commitment to delivering products with best-in-class environmental performance. Green Premium promises compliance with the latest regulations, transparency on environmental impacts, as well as circular and low-CO_2 products.

Guide to assessing product sustainability is a white paper that clarifies global eco-label standards and how to interpret environmental declarations.

Learn more about Green Premium >

Guide to assess a product's sustainability >

Transparency RoHS/REACh

Well-being performance

Reach Free Of Svhc	
Toxic Heavy Metal Free	
Mercury Free	
Rohs Exemption Information	Yes

Certifications & Standards

Reach Regulation	REACh Declaration
Eu Rohs Directive	Pro-active compliance (Product out of EU RoHS legal scope) EU RoHS Declaration
China Rohs Regulation	China RoHS declaration
Environmental Disclosure	Product Environmental Profile
Circularity Profile	No need of specific recycling operations

Dimensions Drawings

Dimensions and Fixing

Below drawing shows a front plate with 4 cut-outs. Refer to the product characteristics to get the number of cut-outs.

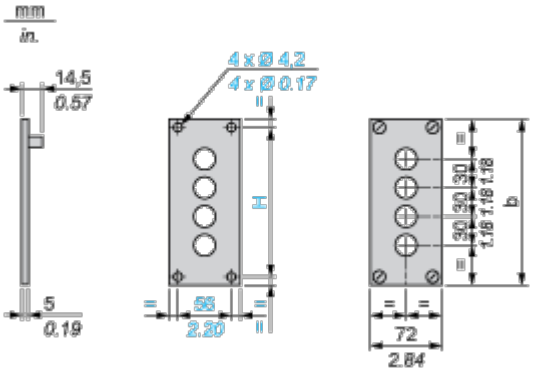

Panel cut-out

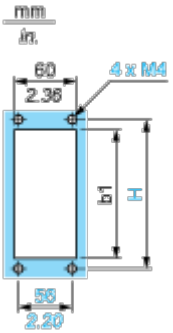

b		b1		H	
mm	in.	mm	in.	mm	in.
204	8.03	176	6.93	188	7.40