Product datasheet

Specifications

yellow empty enclosure lid with light grey base - 2 cut-outs

Local distributor code:

393523074 XALK02

EAN Code: 3389110127317

Main

Range Of Product	Harmony XALK
Product Or Component Type	Empty control station
Device Short Name	XALK
Product Destination	For XB5 Ø 22 mm control and signalling units
Control Station Application	Emergency switching off function Emergency stop function
Number Of Cut-Out	2 cut-outs
Colour Of Base Of Enclosure	Light grey (RAL 7035)
Colour Of Cover	Yellow (RAL 1021)
Material	Polycarbonate
Cable Entry	2 knock-outs for cable entry, clamping capacity: 14 mm 2 knock-outs for Pg 13 cable gland and ISO M20, clamping capacity: 12 mm
Ip Degree Of Protection	IP66 conforming to IEC 60529 IP67 IP69 IP69K

Complementary

Assembly Style	For customer assembly
Number Of Horizontal Rows	1
Number Of Vertical Rows	2
Net Weight	0.193 kg
Resistance To High Pressure Washer	7000000 Pa at 55 °C, distance : 0.1 m
Mounting Of Block	Front mounting Rear mounting
Main Group	2 cut-outs
Group Of Product	Standard yellow

Environment

Protective Treatment	TH
Ambient Air Temperature For Storage	-40…70 °C
Ambient Air Temperature For Operation	-40…70 °C
Overvoltage Category	Class II conforming to IEC 60536
Nema Degree Of Protection	NEMA 13 NEMA 4X

Disclaimer: This documentation is not intended as a substitute for and is not to be used for determining suitability or reliability of these products for specific user applications

Ik Degree Of Protection	IK03 conforming to IEC 62262
Standards	IEC 60947-5-5 UL 508 IEC 60947-1 IEC 60947-5-4 CSA C22.2 No 14 JIS C8201-5-1 IEC 60947-5-1 JIS C8201-1

Packing Units

Unit Type Of Package 1	PCE
Number Of Units In Package 1	1
Package 1 Height	7.0 cm
Package 1 Width	8.0 cm
Package 1 Length	10.7 cm
Package 1 Weight	187.0 g
Unit Type Of Package 2	S03
Number Of Units In Package 2	36
Package 2 Height	30.0 cm
Package 2 Width	30.0 cm
Package 2 Length	40.0 cm
Package 2 Weight	7.134 kg

Contractual warranty

Warranty	18 months

Sustainability

Green Premium™ label is Schneider Electric's commitment to delivering products with best-in-class environmental performance. Green Premium promises compliance with the latest regulations, transparency on environmental impacts, as well as circular and low-CO_2 products.

Guide to assessing product sustainability is a white paper that clarifies global eco-label standards and how to interpret environmental declarations.

Learn more about Green Premium >

Guide to assess a product's sustainability >

Transparency RoHS/REACh

Well-being performance

Reach Free Of Svhc	
Toxic Heavy Metal Free	
Mercury Free	
Rohs Exemption Information	Yes

Certifications & Standards

Reach Regulation	REACh Declaration
Eu Rohs Directive	Pro-active compliance (Product out of EU RoHS legal scope) EU RoHS Declaration
China Rohs Regulation	China RoHS declaration
Environmental Disclosure	Product Environmental Profile
Circularity Profile	End of Life Information

Dimensions Drawings

Dimensions

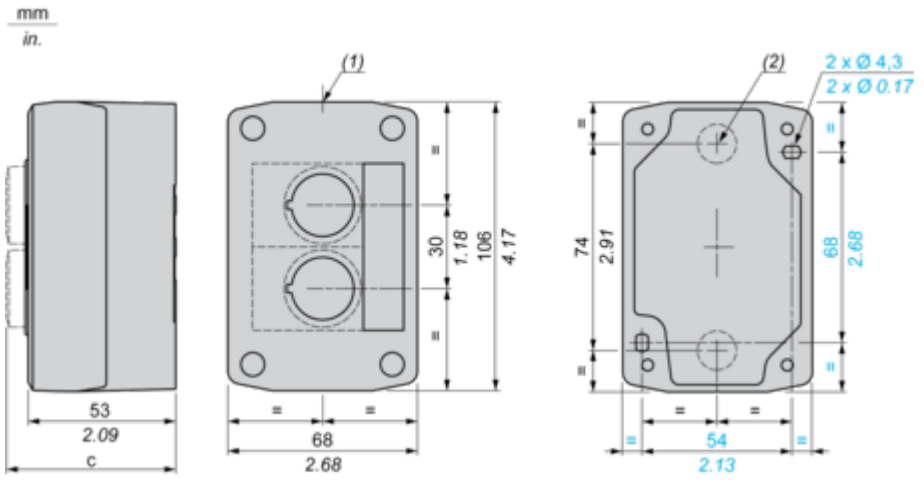

(1) 2 knock-outs for Pg 13.5 cable gland, maximum capacity 12 mm/0.47 in.
(2) Knock-out for cable entry, maximum capacity 14 mm/0.55 in.

Control station fitted with:	c in mm	c in in.
Flush pushbutton	62	2.44
Pilot light	64	2.52
Illuminated pushbutton	65.5	2.58
Projecting pushbutton	66	2.60
Selector switch	80	3.15
Mushroom head pushbutton	91.5	3.58
Latching mushroom head Emergency stop pushbutton wit h key	115	4.53
Key switch	105.5	4.15