Product datasheet

Specifications

Green Premium™

hoistway box XALF for lift inspection- 1 mushroom head emergency stop pb-1NO+1NC

XALFKT64451

EAN Code: 3389119021807

Discontinued

Main

Range Of Product	Harmony XALF
Product Or Component Type	Hoistway box
Device Short Name	XALF
Product Specific Application	Lift inspection
Operator Profile	1 mushroom head push-button
Operator Description	Red unmarked 1 NO + 1 NC
Contact Operation	Slow-break

Complementary

Material	Polycarbonate
Net Weight	0.175 kg
Marking	CE
Contacts Material	Silver alloy (Ag/Ni)

Environment

Protective Treatment	TH
Ambient Air Temperature For Storage	-40…70 °C
Ambient Air Temperature For Operation	0…50 °C
Standards	EN/IEC 60947-5-5 EN 81-20 EN/IEC 60947-5-4 EN/IEC 60947-1 EN/IEC 60947-5-1

Packing Units

Unit Type Of Package 1	PCE
Number Of Units In Package 1	1
Package 1 Height	9.2 cm
Package 1 Width	6.8 cm
Package 1 Length	6.8 cm
Package 1 Weight	154.0 g

Contractual warranty

Disclaimer: This documentation is not intended as a substitute for and is not to be used for determining suitability or reliability of these products for specific user applications

Warranty	18 months

Sustainability

Green Premium™ label is Schneider Electric's commitment to delivering products with best-in-class environmental performance. Green Premium promises compliance with the latest regulations, transparency on environmental impacts, as well as circular and low-CO_2 products.

Guide to assessing product sustainability is a white paper that clarifies global eco-label standards and how to interpret environmental declarations.

Learn more about Green Premium >

Guide to assess a product's sustainability >

Transparency RoHS/REACh

Well-being performance

Mercury Free

Rohs Exemption Information	Yes

Certifications & Standards

Reach Regulation	REACh Declaration
Eu Rohs Directive	Pro-active compliance (Product out of EU RoHS legal scope)
China Rohs Regulation	China RoHS declaration
Environmental Disclosure	Product Environmental Profile
Weee	The product must be disposed on European Union markets following specific waste collection and never end up in rubbish bins
Circularity Profile	End of Life Information

Dimensions Drawings

Dimensions

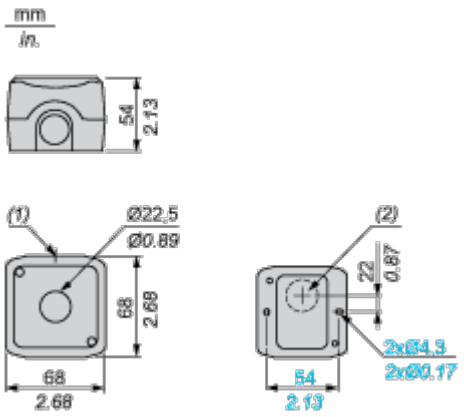

(1) 2 knock-outs for Pg 13.5 cable gland, maximum capacity 12 mm / 0.47 in.

(2) Knock-out for cable entry, maximum capacity 14 mm / 0.55 in.