Product datasheet

Specifications

Green Premium™

empty control station - light grey base and cover

Local distributor code:

403020412 XALE1

EAN Code: 3389119017572

Main

Range Of Product	Harmony XALE
Product Or Component Type	Empty control station
Device Short Name	XALE
Product Destination	For XB7 Ø 22 mm control and signalling units
Number Of Cut-Out	1 cut-out
Colour Of Base Of Enclosure	Light grey (RAL 7035)
Colour Of Cover	Light grey (RAL 7035)
Material	ABS (acrylonitrile butadiene-styrene)
Cable Entry	2 knock-outs, clamping capacity: 16 mm 4 knock-outs for ISO M20
Sale Per Indivisible Quantity	5
Ip Degree Of Protection	IP54 conforming to IEC 60529

Complementary

Assembly Style	For customer assembly
Net Weight	0.08 kg
Marking	CE

Environment

Protective Treatment	TC
Ambient Air Temperature For Storage	-40…70 °C
Ambient Air Temperature For Operation	-25…55 °C
Electrical Shock Protection Class	Class II conforming to IEC 60536
Ik Degree Of Protection	IK05 conforming to EN 50102
Standards	EN/IEC 62208 EN/IEC 60947-5-1 EN/IEC 60947-5-5 EN/IEC 60947-1

Packing Units

Unit Type Of Package 1	PCE
Number Of Units In Package 1	1
Package 1 Height	8.200 cm
Package 1 Width	8.100 cm

Disclaimer: This documentation is not intended as a substitute for and is not to be used for determining suitability or reliability of these products for specific user applications

Package 1 Length	11.500 cm
Package 1 Weight	72.000 g
Unit Type Of Package 2	BB1
Number Of Units In Package 2	5
Package 2 Height	8.300 cm
Package 2 Width	8.100 cm
Package 2 Length	31.300 cm
Package 2 Weight	414.000 g
Unit Type Of Package 3	S03
Number Of Units In Package 3	45
Package 3 Height	30.000 cm
Package 3 Width	30.000 cm
Package 3 Length	40.000 cm
Package 3 Weight	4.200 kg

Contractual warranty

Warranty	18 months

Sustainability

Green Premium™ label is Schneider Electric's commitment to delivering products with best-in-class environmental performance. Green Premium promises compliance with the latest regulations, transparency on environmental impacts, as well as circular and low-CO_2 products.

Guide to assessing product sustainability is a white paper that clarifies global eco-label standards and how to interpret environmental declarations.

Learn more about Green Premium >

Guide to assess a product's sustainability >

Transparency RoHS/REACh

Well-being performance

Reach Free Of Svhc	
Toxic Heavy Metal Free	
Mercury Free	
Rohs Exemption Information	Yes

Certifications & Standards

Reach Regulation	REACh Declaration
Eu Rohs Directive	Pro-active compliance (Product out of EU RoHS legal scope) EU RoHS Declaration
China Rohs Regulation	China RoHS declaration
Environmental Disclosure	Product Environmental Profile
Circularity Profile	End of Life Information

Dimensions Drawings

Dimensions

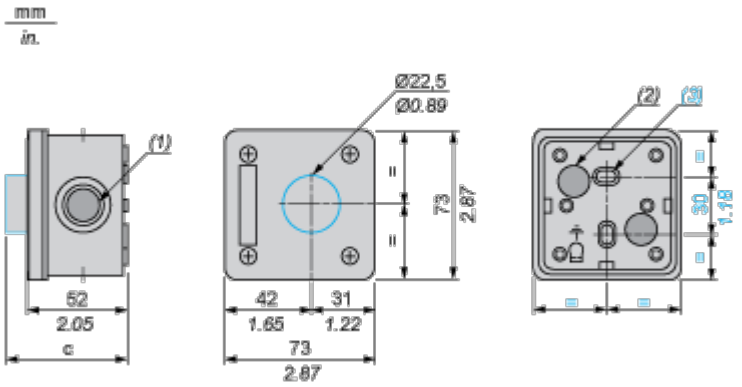

(1) 4 ISO 20 knock-outs.

(2) 2 knock-outs for cable entry, maximum capacity 16 mm / 0.63 in.

(3) 2 knock-out elongated fixing holes Ø 3 mm x 5 mm / Ø 0.12 in. x 0.20 in.

Control station XALE fitted with:	c in mm	c in in.
Flush pushbutton	61	2.40
Projecting pushbutton	63	2.48
Illuminated pushbutton	66.5	2.62
Pilot light	63	2.48
Emergency stop without key	81.5	3.21
Selector switch with standard handle	76.5	3.01
Key switch	92	3.62