Product datasheet

Specifications

Green Premium™

dark grey station - green flush/red flush pushbuttons Ø22 and red pilot light

Local distributor code:

386425642 XALD363G

EAN Code: 3389110114508

Main

Range Of Product	Harmony XALD
Product Or Component Type	Complete control station
Device Short Name	XALD
Product Destination	For XB5 Ø 22 mm control and signalling units
Control Station Application	Start-Stop function
Colour Of Base Of Enclosure	Light grey (RAL 7035)
Colour Of Cover	Dark grey (RAL 7016)
Material	Polycarbonate
Operator Profile	2 flush push-buttons - 1 central pilot light
Operators Description	Green "I" 1 NO - red "O" 1 NC
Control Station Composition	1 flush push-button, green 1 NO I marking 1 flush push-button, red 1 NC O marking 1 pilot light
Marking Location	Marking on push-button
Contact Operation	Slow-break
Light Source	Integrated and protected LED
Light Source Colour	Red
[Us] Rated Supply Voltage	120 V AC

Complementary

Cable Entry	2 knock-outs for cable entry, clamping capacity: 14 mm 2 knock-outs for Pg 13 cable gland and ISO M20, clamping capacity: 12 mm
Net Weight	0.261 kg
Resistance To High Pressure Washer	7000000 Pa at 55 °C, distance : 0.1 m
Colour Of Marking	Black marking when white caps White marking when green, red or black caps
Positive Opening	With conforming to EN/IEC 60947-5-1 appendix K
Operating Travel	1.5 mm (NC changing electrical state) 2.6 mm (NO changing electrical state) 4.3 mm (total travel)
Operating Force	3.5 N NC changing electrical state 3.8 N NO changing electrical state
Mechanical Durability	10000000 cycles

Disclaimer: This documentation is not intended as a substitute for and is not to be used for determining suitability or reliability of these products for specific user applications

Connections - Terminals	Screw clamp terminals, <= 2 x 1.5 mm² with cable end conforming to EN/IEC 60947-1 Screw clamp terminals, >= 1 x 0.22 mm² without cable end conforming to EN/IEC 60947-1
Tightening Torque	0.8…1.2 N.m conforming to EN/IEC 60947-1
Shape Of Screw Head	Cross compatible with Philips no 1 screwdriver Cross compatible with pozidriv No 1 screwdriver Slotted compatible with flat Ø 4 mm screwdriver Slotted compatible with flat Ø 5.5 mm screwdriver
Contacts Material	Silver alloy (Ag/Ni)
Short-Circuit Protection	10 A cartridge fuse type gG conforming to EN/IEC 60947-5-1
[Ith] Conventional Free Air Thermal Current	10 A conforming to EN/IEC 60947-5-1
[Ui] Rated Insulation Voltage	600 V (pollution degree 3) conforming to EN/IEC 60947-1
[Uimp] Rated Impulse Withstand Voltage	6 kV conforming to EN/IEC 60947-1
[Ie] Rated Operational Current	6 A at 120 V, AC-15, A600 conforming to EN/IEC 60947-5-1 3 A at 240 V, AC-15, A600 conforming to EN/IEC 60947-5-1 1.2 A at 600 V, AC-15, A600 conforming to EN/IEC 60947-5-1 0.55 A at 125 V, DC-13, Q600 conforming to EN/IEC 60947-5-1 0.27 A at 250 V, DC-13, Q600 conforming to EN/IEC 60947-5-1 0.1 A at 600 V, DC-13, Q600 conforming to EN/IEC 60947-5-1
Electrical Durability	1000000 cycles, AC-15, 2 A at 230 V, operating rate <3600 cyc/h, load factor: 0.5 conforming to EN/IEC 60947-5-1 appendix C 1000000 cycles, AC-15, 3 A at 120 V, operating rate <3600 cyc/h, load factor: 0.5 conforming to EN/IEC 60947-5-1 appendix C 1000000 cycles, AC-15, 4 A at 24 V, operating rate <3600 cyc/h, load factor: 0.5 conforming to EN/IEC 60947-5-1 appendix C 1000000 cycles, DC-13, 0.2 A at 110 V, operating rate <3600 cyc/h, load factor: 0.5 conforming to EN/IEC 60947-5-1 appendix C 1000000 cycles, DC-13, 0.5 A at 24 V, operating rate <3600 cyc/h, load factor: 0.5 conforming to EN/IEC 60947-5-1 appendix C
Electrical Reliability	Λ < 10exp(-6) at 5 V, 1 mA conforming to EN/IEC 60947-5-4 Λ < 10exp(-8) at 17 V, 5 mA conforming to EN/IEC 60947-5-4
Signalling Type	Steady
Current Consumption	14 mA
Service Life	100000 h at rated voltage and 25 °C
Surge Withstand	1 kV conforming to IEC 61000-4-5

Environment

Protective Treatment	TH
Ambient Air Temperature For Storage	-40…70 °C
Ambient Air Temperature For Operation	-40…70 °C
Overvoltage Category	Class II conforming to IEC 60536
Ip Degree Of Protection	IP66 conforming to IEC 60529 IP67 IP69 IP69K
Nema Degree Of Protection	NEMA 13 NEMA 4X
Ik Degree Of Protection	IK05 conforming to EN 50102

Standards	UL 508 EN/IEC 60947-1 EN/IEC 60947-5-4 JIS C8201-5-1 EN/IEC 60947-5-1 EN/IEC 60947-5-5 CSA C22.2 No 14 JIS C8201-1
Vibration Resistance	5 gn (f= 12…500 Hz) conforming to IEC 60068-2-6
Shock Resistance	30 gn (duration = 18 ms) for half sine wave acceleration conforming to IEC 60068-2-27 50 gn (duration = 11 ms) for half sine wave acceleration conforming to IEC 60068-2-27
Resistance To Fast Transients	2 kV conforming to IEC 61000-4-4
Resistance To Electromagnetic Fields	10 V/m conforming to IEC 61000-4-3
Resistance To Electrostatic Discharge	6 kV on contact (on metal parts) conforming to IEC 61000-4-2 8 kV in free air (in insulating parts) conforming to IEC 61000-4-2
Electromagnetic Emission	Class B conforming to IEC 55011

Packing Units

Unit Type Of Package 1	PCE
Number Of Units In Package 1	1
Package 1 Height	6.300 cm
Package 1 Width	6.800 cm
Package 1 Length	13.600 cm
Package 1 Weight	261.000 g
Unit Type Of Package 2	S03
Number Of Units In Package 2	20
Package 2 Height	30.000 cm
Package 2 Width	30.000 cm
Package 2 Length	40.000 cm
Package 2 Weight	6.264 kg

Contractual warranty

Warranty	18 months

Sustainability

Green Premium™ label is Schneider Electric's commitment to delivering products with best-in-class environmental performance. Green Premium promises compliance with the latest regulations, transparency on environmental impacts, as well as circular and low-CO_2 products.

Guide to assessing product sustainability is a white paper that clarifies global eco-label standards and how to interpret environmental declarations.

Learn more about Green Premium >

Guide to assess a product's sustainability >

Transparency RoHS/REACh

Well-being performance

Mercury Free

Rohs Exemption Information	Yes

Certifications & Standards

Reach Regulation	REACh Declaration
Eu Rohs Directive	Pro-active compliance (Product out of EU RoHS legal scope)
China Rohs Regulation	China RoHS declaration
Environmental Disclosure	Product Environmental Profile
Weee	The product must be disposed on European Union markets following specific waste collection and never end up in rubbish bins
Circularity Profile	End of Life Information

Dimensions Drawings

Dimensions

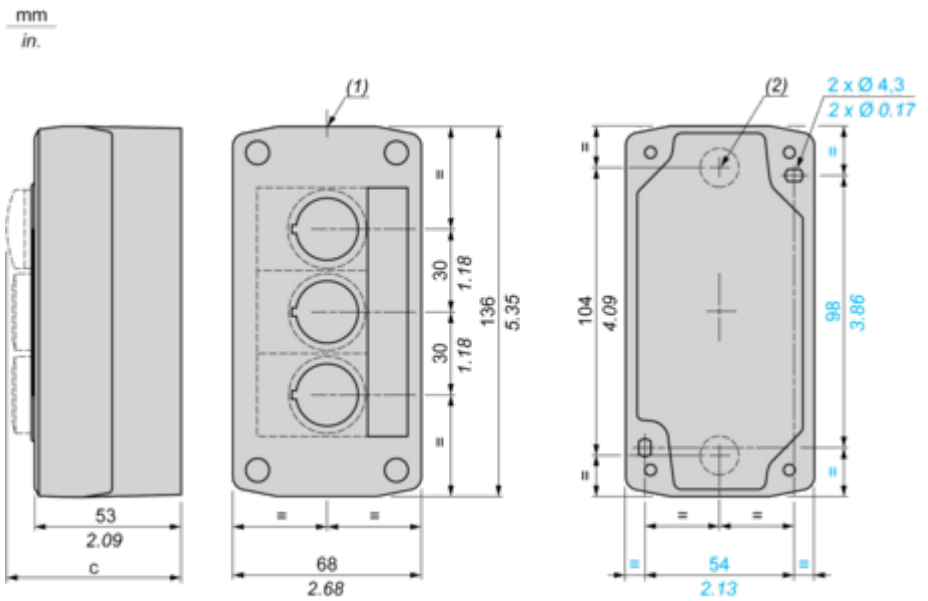

(1) 2 knock-outs for Pg 13.5 cable gland, maximum capacity 12 mm/0.47 in.
(2) Knock-out for cable entry, maximum capacity 14 mm/0.55 in.

Control station fitted with:	c in mm	c in in.
Flush pushbutton	62	2.44
Illuminated pushbutton	64	2.52
Pilot light	65.5	2.58
Projecting pushbutton	66	2.60
Selector switch	80	3.15
Key switch	105.5	4.15