# Product datasheet

Specifications

## Control station, plastic, dark grey lid, 2 flush push buttons Ø22, marked UP ARROW DOWN ARROW, 2 NO

Local distributor code:

237262310 XALD222

**EAN Code: 3389110114164**

## Main

| | |
|---|---|
| **Range Of Product** | Harmony XALD |
| **Product Or Component Type** | Complete control station |
| **Device Short Name** | XALD |
| **Product Destination** | For XB5 Ø 22 mm control and signalling units |
| **Control Station Application** | Two functions |
| **Colour Of Base Of Enclosure** | Light grey (RAL 7035) |
| **Colour Of Cover** | Dark grey (RAL 7016) |
| **Material** | Polycarbonate |
| **Operator Profile** | 2 flush push-buttons |
| **Operators Description** | White "up arrow" 1 NO - black "down arrow" 1 NO |
| **Control Station Composition** | 1 flush push-button, black 1 NO, white down arrow marking<br>1 flush push-button, white 1 NO, black up arrow marking |
| **Marking Location** | Marking on push-button |
| **Contact Operation** | Slow-break |

## Complementary

| | |
|---|---|
| **Cable Entry** | 2 knock-outs for cable entry, clamping capacity: 14 mm<br>2 knock-outs for Pg 13 cable gland and ISO M20, clamping capacity: 12 mm |
| **Net Weight** | 0.233 kg |
| **Resistance To High Pressure Washer** | 7000000 Pa at 55 °C, distance : 0.1 m |
| **Colour Of Marking** | White marking when green, red or black caps<br>Black marking when white caps |
| **Positive Opening** | Without |
| **Operating Travel** | 2.6 mm (NO changing electrical state)<br>4.3 mm (total travel) |
| **Operating Force** | 3.8 N NO changing electrical state |
| **Mechanical Durability** | 10000000 cycles |
| **Connections - Terminals** | Screw clamp terminals, <= 2 x 1.5 mm² with cable end conforming to IEC 60947-1<br>Screw clamp terminals, >= 1 x 0.22 mm² without cable end conforming to IEC 60947-1 |
| **Tightening Torque** | 0.8…1.2 N.m conforming to IEC 60947-1 |
| **Shape Of Screw Head** | Cross compatible with Philips no 1 screwdriver<br>Cross compatible with pozidriv No 1 screwdriver<br>Slotted compatible with flat Ø 4 mm screwdriver<br>Slotted compatible with flat Ø 5.5 mm screwdriver |

Disclaimer: This documentation is not intended as a substitute for and is not to be used for determining suitability or reliability of these products for specific user applications

| | |
|---|---|
| **Contacts Material** | Silver alloy (Ag/Ni) |
| **Short-Circuit Protection** | 10 A cartridge fuse type gG conforming to IEC 60947-5-1 |
| **[Ith] Conventional Free Air Thermal Current** | 10 A conforming to IEC 60947-5-1 |
| **[Ui] Rated Insulation Voltage** | 600 V (pollution degree 3) conforming to IEC 60947-1 |
| **[Uimp] Rated Impulse Withstand Voltage** | 6 kV conforming to IEC 60947-1 |
| **[Ie] Rated Operational Current** | 6 A at 120 V, AC-15, A600 conforming to IEC 60947-5-1<br>3 A at 240 V, AC-15, A600 conforming to IEC 60947-5-1<br>1.2 A at 600 V, AC-15, A600 conforming to IEC 60947-5-1<br>0.55 A at 125 V, DC-13, Q600 conforming to IEC 60947-5-1<br>0.27 A at 250 V, DC-13, Q600 conforming to IEC 60947-5-1<br>0.1 A at 600 V, DC-13, Q600 conforming to IEC 60947-5-1 |
| **Electrical Durability** | 1000000 cycles, AC-15, 2 A at 230 V, operating rate <3600 cyc/h, load factor: 0.5 conforming to IEC 60947-5-1 appendix C<br>1000000 cycles, AC-15, 3 A at 120 V, operating rate <3600 cyc/h, load factor: 0.5 conforming to IEC 60947-5-1 appendix C<br>1000000 cycles, AC-15, 4 A at 24 V, operating rate <3600 cyc/h, load factor: 0.5 conforming to IEC 60947-5-1 appendix C<br>1000000 cycles, DC-13, 0.2 A at 110 V, operating rate <3600 cyc/h, load factor: 0.5 conforming to IEC 60947-5-1 appendix C<br>1000000 cycles, DC-13, 0.5 A at 24 V, operating rate <3600 cyc/h, load factor: 0.5 conforming to IEC 60947-5-1 appendix C |
| **Electrical Reliability** | Λ < 10exp(-6) at 5 V and 1 mA conforming to IEC 60947-5-4<br>Λ < 10exp(-8) at 17 V and 5 mA conforming to IEC 60947-5-4 |

# Environment

| | |
|---|---|
| **Protective Treatment** | TH |
| **Ambient Air Temperature For Storage** | -40…70 °C |
| **Ambient Air Temperature For Operation** | -40…70 °C |
| **Electrical Shock Protection Class** | Class II conforming to IEC 60536 |
| **Ip Degree Of Protection** | IP66 conforming to IEC 60529<br>IP67<br>IP69<br>IP69K |
| **Nema Degree Of Protection** | NEMA 13<br>NEMA 4X |
| **Ik Degree Of Protection** | IK03 conforming to IEC 62262 |
| **Standards** | JIS C8201-5-1<br>IEC 60947-1<br>CSA C22.2 No 14<br>IEC 60947-5-4<br>IEC 60947-5-1<br>UL 508<br>IEC 60947-5-5<br>JIS C8201-1 |
| **Vibration Resistance** | 5 gn (f= 12…500 Hz) conforming to IEC 60068-2-6 |
| **Shock Resistance** | 30 gn (duration = 18 ms) for half sine wave acceleration conforming to IEC 60068-2-27<br>50 gn (duration = 11 ms) for half sine wave acceleration conforming to IEC 60068-2-27 |

# Packing Units

| | |
|---|---|
| **Unit Type Of Package 1** | PCE |
| **Number Of Units In Package 1** | 1 |
| **Package 1 Height** | 7.0 cm |
| **Package 1 Width** | 9.8 cm |

| | |
|---|---|
| **Package 1 Length** | 11.0 cm |
| **Package 1 Weight** | 224.0 g |
| **Unit Type Of Package 2** | S03 |
| **Number Of Units In Package 2** | 25 |
| **Package 2 Height** | 30 cm |
| **Package 2 Width** | 30 cm |
| **Package 2 Length** | 40 cm |
| **Package 2 Weight** | 6.085 kg |

## Contractual warranty

| | |
|---|---|
| **Warranty** | 18 months |

## Sustainability

**Green Premium™ label** is Schneider Electric's commitment to delivering products with best-in-class environmental performance. Green Premium promises compliance with the latest regulations, transparency on environmental impacts, as well as circular and low-$CO_2$ products.

**Guide to assessing product sustainability** is a white paper that clarifies global eco-label standards and how to interpret environmental declarations.

Learn more about Green Premium >

Guide to assess a product's sustainability >

Transparency RoHS/REACh

## Well-being performance

| | |
|---|---|
| Reach Free Of Svhc | |
| Toxic Heavy Metal Free | |
| Mercury Free | |
| Rohs Exemption Information | Yes |

## Certifications & Standards

| | |
|---|---|
| **Reach Regulation** | REACh Declaration |
| **Eu Rohs Directive** | Pro-active compliance (Product out of EU RoHS legal scope)<br>EU RoHS Declaration |
| **China Rohs Regulation** | China RoHS declaration |
| **Environmental Disclosure** | Product Environmental Profile |
| **Weee** | The product must be disposed on European Union markets following specific waste collection and never end up in rubbish bins |
| **Circularity Profile** | End of Life Information |

## Dimensions Drawings

### Dimensions

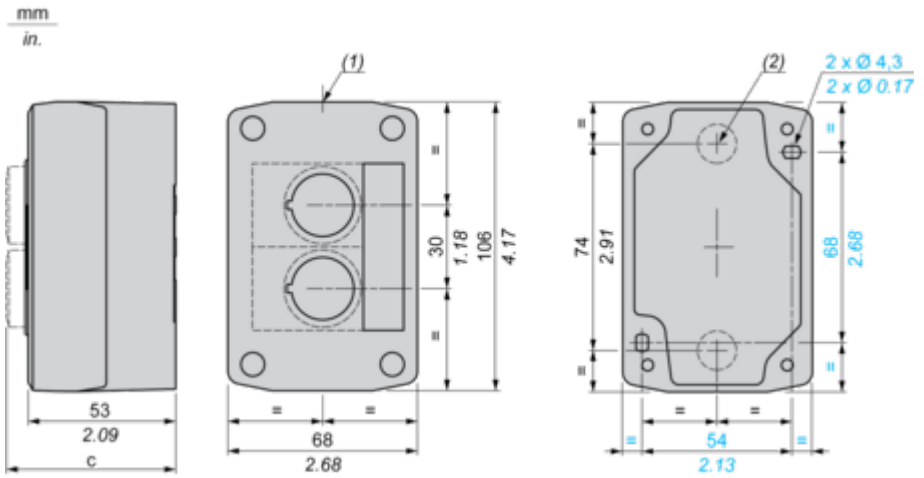


**(1)** 2 knock-outs for Pg 13.5 cable gland, maximum capacity 12 mm/0.47 in.
**(2)** Knock-out for cable entry, maximum capacity 14 mm/0.55 in.

| Control station fitted with: | c in mm | c in in. |
|---|---|---|
| Flush pushbutton | 62 | 2.44 |
| Pilot light | 64 | 2.52 |
| Illuminated pushbutton | 65.5 | 2.58 |
| Projecting pushbutton | 66 | 2.60 |
| Selector switch | 80 | 3.15 |
| Mushroom head pushbutton | 91.5 | 3.58 |
| Latching mushroom head Emergency stop pushbutton wit h key | 115 | 4.53 |
| Key switch | 105.5 | 4.15 |