Product datasheet

Specifications

Pendant control station, plastic, yellow 6 push buttons

Local distributor code:

2200921 XACA671

EAN Code: 3389110645118

Main

Range Of Product	Harmony XAC
Product Or Component Type	Pendant control station
Device Short Name	XACA

Complementary

Control Station Type	Double insulated
Enclosure Material	Polypropylene
Electrical Circuit Type	Control circuit
Enclosure Type	Complete ready for use
Control Station Application	Control of single speed hoist motor
Control Station Composition	6 push-buttons
Control Button Type	First push-button 1 NO raise, slow Second push-button 1 NO lower, slow Fourth push-button 1 NO left, slow Third push-button 1 NO right, slow Fifth push-button 1 NO forward slow Sixth push-button 1 NO reverse, slow
Product Compatibility	ZB2BE101 for each direction
Mechanical Interlocking	With mechanical interlocking between pairs
Control Station Colour	Yellow
Connections - Terminals	Screw clamp terminals, 1 x 0.5...1 x 2.5 mm² without cable end Screw clamp terminals, 1 x 0.5...2 x 1.5 mm² with cable end
Standards	CSA C22.2 No 14 UL 508 EN/IEC 60947-5-1 EN/IEC 60204-32
Product Certifications	CCC GOST
Protective Treatment	TH
Ambient Air Temperature For Operation	-25…70 °C
Ambient Air Temperature For Storage	-40…70 °C
Vibration Resistance	15 gn (f= 10…500 Hz) conforming to IEC 60068-2-6
Shock Resistance	100 gn conforming to IEC 60068-2-27
Overvoltage Category	Class II conforming to IEC 61140
Ip Degree Of Protection	IP65 conforming to IEC 60529
Ik Degree Of Protection	IK08 conforming to EN 50102

Disclaimer: This documentation is not intended as a substitute for and is not to be used for determining suitability or reliability of these products for specific user applications

Mechanical Durability	1000000 cycles
Cable Entry	Rubber sleeve with stepped entry 8…26 mm
Contact Code Designation	A600 AC-15, Ue = 240 V, Ie = 3 A conforming to IEC 60947-5-1 appendix A A600 AC-15, Ue = 600 V, Ie = 1.2 A conforming to IEC 60947-5-1 appendix A Q600 DC-13, Ue = 250 V, Ie = 0.27 A conforming to IEC 60947-5-1 appendix A Q600 DC-13, Ue = 600 V, Ie = 0.1 A conforming to IEC 60947-5-1 appendix A
[Ithe] Conventional Enclosed Thermal Current	10 A
[Ui] Rated Insulation Voltage	600 V (pollution degree 3)
[Uimp] Rated Impulse Withstand Voltage	6 kV conforming to IEC 60947-1
Contact Operation	Slow-break
Maximum Resistance Across Terminals	25 MOhm
Operating Force	10 N push-button
Short-Circuit Protection	10 A fuse protection by cartridge fuse type gG
Rated Operational Power In W	40 W DC-13 for 1000000 cycles, operating rate <60 cyc/mn at 120 V, load factor = 0.5 (inductive load) conforming to IEC 60947-5-1 appendix C 48 W DC-13 for 1000000 cycles, operating rate <60 cyc/mn at 48 V, load factor = 0.5 (inductive load) conforming to IEC 60947-5-1 appendix C 65 W DC-13 for 1000000 cycles, operating rate <60 cyc/mn at 24 V, load factor = 0.5 (inductive load) conforming to IEC 60947-5-1 appendix C
Terminals Description Iso N°1	(13-14)NO
Terminal Identifier	(11-12)NC (13-14)NO
Net Weight	0.86 kg

Packing Units

Unit Type Of Package 1	PCE
Number Of Units In Package 1	1
Package 1 Height	8.500 cm
Package 1 Width	9.000 cm
Package 1 Length	56.500 cm
Package 1 Weight	901.000 g
Unit Type Of Package 2	P06
Number Of Units In Package 2	42
Package 2 Height	75.000 cm
Package 2 Width	60.000 cm
Package 2 Length	80.000 cm
Package 2 Weight	47.792 kg

Contractual warranty

Warranty	18 months

Sustainability

Green Premium™ label is Schneider Electric's commitment to delivering products with best-in-class environmental performance. Green Premium promises compliance with the latest regulations, transparency on environmental impacts, as well as circular and low-CO_2 products.

Guide to assessing product sustainability is a white paper that clarifies global eco-label standards and how to interpret environmental declarations.

Learn more about Green Premium >

Guide to assess a product's sustainability >

Transparency RoHS/REACh

Well-being performance

Reach Free Of Svhc	
Toxic Heavy Metal Free	
Mercury Free	
Rohs Exemption Information	Yes

Certifications & Standards

Reach Regulation	REACh Declaration
Eu Rohs Directive	Pro-active compliance (Product out of EU RoHS legal scope) EU RoHS Declaration
China Rohs Regulation	China RoHS declaration
Environmental Disclosure	Product Environmental Profile
Weee	The product must be disposed on European Union markets following specific waste collection and never end up in rubbish bins
Circularity Profile	No need of specific recycling operations

Dimensions Drawings

Dimensions

Below drawing shows a product with 6 cut-outs. Select the number of cut-outs according to the product characteristics in order to get b, b1 and c dimensions.

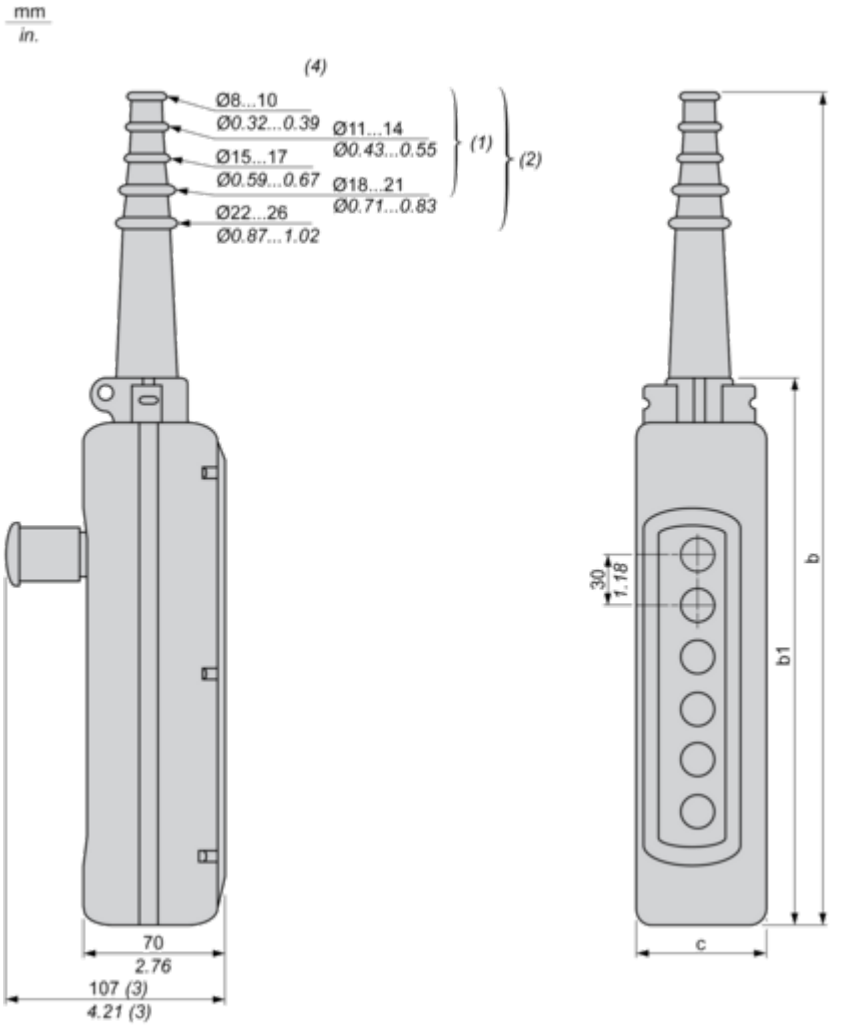

(1) For 2 and 3-way XAC A stations.
(2) For 4 to 8-way XAC A stations.
(3) With trigger action Emergency stop head operator
(4) Internal ø

Dimensions in mm

Number of cut-outs	2	3	4	5	6	8	12
b	314	314	440	440	500	560	680
b1	190	190	250	250	310	370	490
c	80	80	80	80	80	80	92

Dimensions in in.

Number of cut-outs	2	3	4	5	6	8	12
b	12.36	12.36	17.32	17.32	19.68	22.05	26.77
b1	7.48	7.48	9.84	9.84	12.20	14.57	19.29

Number of cut-outs	2	3	4	5	6	8	12
c	3.15	3.15	3.15	3.15	3.15	3.15	3.62

Connections and Schema

Control of Single-Speed Reversing Motor

With ZBE2BE101 + ZB2BE102 contacts blocks, to be ordered separately

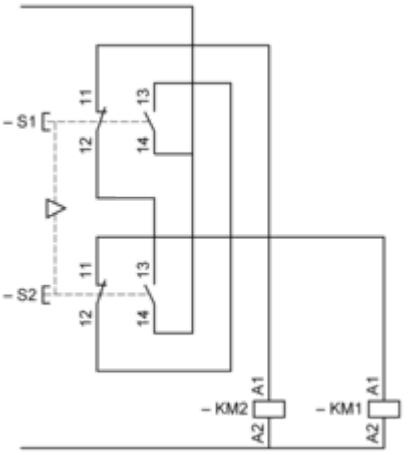

Performance Curves

Rated Operational Power

AC Supply 50/60 Hz Inductive Circuit

Operating rate: 3600 operating cycles/hour. Load factor: 0.5.
Millions of operating cycles, AC-15 utilization category

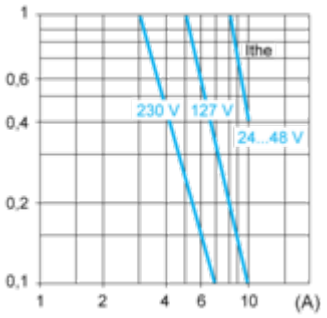

Ithe Thermal current
(A) Current

DC Supply

Operating rate: 3600 operating cycles/hour. Load factor: 0.5.
Power broken in W for 1 million operating cycles, DC-13 utilization category

Voltage	V	24	48	120
Inductive circuit	W	65	48	40