# Product datasheet

Specifications

Green Premium™

## pendant control station XAC-A - 2 pushbuttons 1 Emergency stop

Local distributor code:

393522800 XACA2914

Discontinued on: 5 Jan 2024

End-of-service on: 5 Apr 2024

Discontinued

**EAN Code: 3389110891393**

## Main

| | |
|---|---|
| **Range Of Product** | Harmony XAC |
| **Product Or Component Type** | Pendant control station |
| **Device Short Name** | XACA |

## Complementary

| | |
|---|---|
| **Control Station Type** | Double insulated |
| **Enclosure Material** | Polypropylene |
| **Electrical Circuit Type** | Control circuit |
| **Enclosure Type** | Complete ready for use |
| **Control Station Application** | Control of 2-speed hoist motor |
| **Control Station Composition** | 2 push-buttons + 1 emergency stop |
| **Control Button Type** | Emergency stop push-button Ø 30 mm 1 NC trigger action<br>First push-button 1 NC + 2 NO raise, slow-fast<br>Second push-button 1 NC + 2 NO lower, slow-fast |
| **Product Compatibility** | ZB2BE102 for emergency stop<br>XENG1191 for each direction |
| **Mechanical Interlocking** | With mechanical interlocking |
| **Control Station Colour** | Yellow |
| **Connections - Terminals** | Screw clamp terminals, 1 x 0.5...1 x 2.5 mm² without cable end<br>Screw clamp terminals, 1 x 0.5...2 x 1.5 mm² with cable end |
| **Standards** | EN/ISO 13850: 2006<br>EN/IEC 60204-32<br>UL 508<br>CSA C22.2 No 14<br>EN/IEC 60947-5-1<br>EN/IEC 60947-5-5 |
| **Product Certifications** | CCC<br>GOST |
| **Protective Treatment** | TH |
| **Ambient Air Temperature For Operation** | -25…70 °C |
| **Ambient Air Temperature For Storage** | -40…70 °C |
| **Vibration Resistance** | 15 gn (f= 10…500 Hz) conforming to IEC 60068-2-6 |
| **Shock Resistance** | 100 gn conforming to IEC 60068-2-27 |
| **Overvoltage Category** | Class II conforming to IEC 61140 |
| **Ip Degree Of Protection** | IP65 conforming to IEC 60529 |

Disclaimer: This documentation is not intended as a substitute for and is not to be used for determining suitability or reliability of these products for specific user applications

| | |
|---|---|
| **Ik Degree Of Protection** | IK08 conforming to EN 50102 |
| **Mechanical Durability** | 1000000 cycles |
| **Cable Entry** | Rubber sleeve with stepped entry 8…26 mm |
| **Contact Code Designation** | A600 AC-15, Ue = 240 V, Ie = 3 A conforming to IEC 60947-5-1 appendix A<br>A600 AC-15, Ue = 600 V, Ie = 1.2 A conforming to IEC 60947-5-1 appendix A<br>Q600 DC-13, Ue = 250 V, Ie = 0.27 A conforming to IEC 60947-5-1 appendix A<br>Q600 DC-13, Ue = 600 V, Ie = 0.1 A conforming to IEC 60947-5-1 appendix A |
| **[Ithe] Conventional Enclosed Thermal Current** | 10 A |
| **[Ui] Rated Insulation Voltage** | 600 V (pollution degree 3) |
| **[Uimp] Rated Impulse Withstand Voltage** | 6 kV conforming to IEC 60947-1 |
| **Contact Operation** | Slow-break<br>Staggered |
| **Maximum Resistance Across Terminals** | 25 MOhm |
| **Operating Force** | 18 N push-button<br>8 N emergency stop |
| **Short-Circuit Protection** | 10 A fuse protection by cartridge fuse type gG |
| **Rated Operational Power In W** | 40 W DC-13 for 1000000 cycles, operating rate <60 cyc/mn at 120 V, load factor = 0.5 (inductive load) conforming to IEC 60947-5-1 appendix C<br>48 W DC-13 for 1000000 cycles, operating rate <60 cyc/mn at 48 V, load factor = 0.5 (inductive load) conforming to IEC 60947-5-1 appendix C<br>65 W DC-13 for 1000000 cycles, operating rate <60 cyc/mn at 24 V, load factor = 0.5 (inductive load) conforming to IEC 60947-5-1 appendix C |
| **Terminals Description Iso N°1** | (33-34)NO_CL<br>(21-22)NC<br>(13-14)NO |
| **Terminals Description Iso N°2** | (11-12)NC |
| **Terminal Identifier** | (11-12)NC<br>(13-14)NO |
| **Net Weight** | 0.57 kg |

## Packing Units

| | |
|---|---|
| **Unit Type Of Package 1** | PCE |
| **Number Of Units In Package 1** | 1 |
| **Package 1 Height** | 10 cm |
| **Package 1 Width** | 11 cm |
| **Package 1 Length** | 52 cm |
| **Package 1 Weight** | 694 g |

## Contractual warranty

| | |
|---|---|
| **Warranty** | 18 months |

## Sustainability

**Green Premium™ label** is Schneider Electric's commitment to delivering products with best-in-class environmental performance. Green Premium promises compliance with the latest regulations, transparency on environmental impacts, as well as circular and low-$CO_2$ products.

**Guide to assessing product sustainability** is a white paper that clarifies global eco-label standards and how to interpret environmental declarations.

Learn more about Green Premium >

Guide to assess a product's sustainability >

Transparency RoHS/REACh

## Well-being performance

| | |
|---|---|
| Reach Free Of Svhc | |
| Toxic Heavy Metal Free | |
| Mercury Free | |
| Rohs Exemption Information | Yes |

## Certifications & Standards

| | |
|---|---|
| **Reach Regulation** | REACh Declaration |
| **Eu Rohs Directive** | Pro-active compliance (Product out of EU RoHS legal scope)<br>EU RoHS Declaration |
| **China Rohs Regulation** | China RoHS declaration |
| **Environmental Disclosure** | Product Environmental Profile |
| **Weee** | The product must be disposed on European Union markets following specific waste collection and never end up in rubbish bins |
| **Circularity Profile** | No need of specific recycling operations |

## Dimensions Drawings

### Dimensions

Below drawing shows a product with 6 cut-outs. Select the number of cut-outs according to the product characteristics in order to get b, b1 and c dimensions.

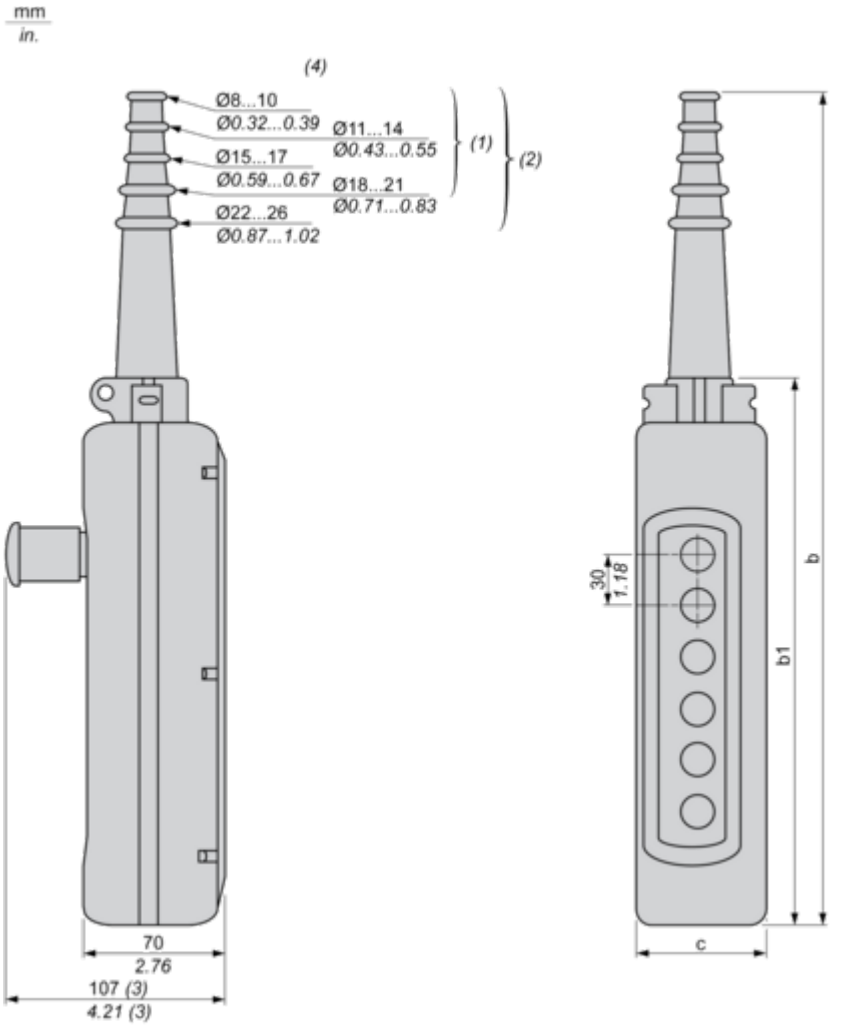


**(1)** For 2 and 3-way XAC A stations.
**(2)** For 4 to 8-way XAC A stations.
**(3)** With trigger action Emergency stop head operator
**(4)** Internal ø

**Dimensions in mm**

| Number of cut-outs | 2 | 3 | 4 | 5 | 6 | 8 | 12 |
|---|---|---|---|---|---|---|---|
| b | 314 | 314 | 440 | 440 | 500 | 560 | 680 |
| b1 | 190 | 190 | 250 | 250 | 310 | 370 | 490 |
| c | 80 | 80 | 80 | 80 | 80 | 80 | 92 |

**Dimensions in in.**

| Number of cut-outs | 2 | 3 | 4 | 5 | 6 | 8 | 12 |
|---|---|---|---|---|---|---|---|
| b | 12.36 | 12.36 | 17.32 | 17.32 | 19.68 | 22.05 | 26.77 |
| b1 | 7.48 | 7.48 | 9.84 | 9.84 | 12.20 | 14.57 | 19.29 |

| Number of cut-outs | 2 | 3 | 4 | 5 | 6 | 8 | 12 |
|---|---|---|---|---|---|---|---|
| c | 3.15 | 3.15 | 3.15 | 3.15 | 3.15 | 3.15 | 3.62 |

## Connections and Schema

### Control of 2-Speed Reversing Motor

With two XENG1191 contact blocks, to be ordered separately

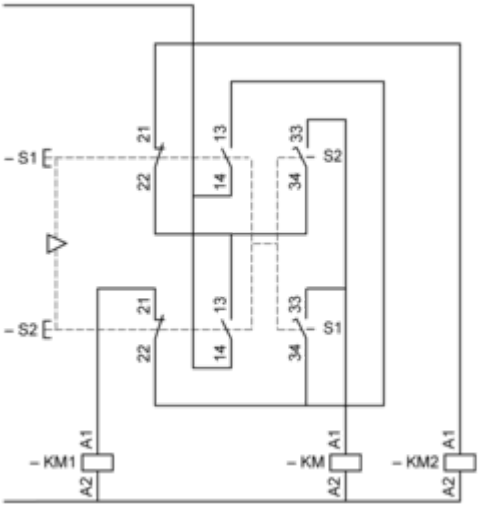


**KM** High speed contactor

# Performance Curves

## Rated Operational Power

### AC Supply 50/60 Hz Inductive Circuit

Operating rate: 3600 operating cycles/hour. Load factor: 0.5.
**Millions of operating cycles, AC-15 utilization category**

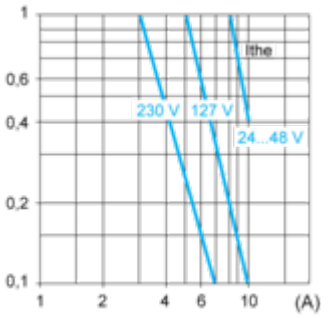


**Ithe** Thermal current
**(A)** Current

### DC Supply

Operating rate: 3600 operating cycles/hour. Load factor: 0.5.
**Power broken in W for 1 million operating cycles, DC-13 utilization category**

| Voltage | V | 24 | 48 | 120 |
|---|---|---|---|---|
| Inductive circuit | W | 65 | 48 | 40 |