Product datasheet

Specifications

expansion block - TM7 - IP67 - 4 AI - 0-20mA - M12 connector

TM7BAI4CLA

EAN Code: 3595864093130

Main

Range Of Product	Modicon TM7
Product Or Component Type	Analog I/O expansion block
Range Compatibility	Modicon LMC058 Modicon M258
Enclosure Material	Plastic
Bus Type	TM7 bus
[Ue] Rated Operational Voltage	24 V DC
Input/Output Number	4
Input/Output Number Of Block	4 I

Complementary

Analogue Input Number	4
Analogue Input Type	Current
Analogue Input Range	0...20 mA
Analogue Input Resolution	12 bits
Sensor Power Supply	24 V, 500 mA for all channels with overload, short-circuit and reverse polarity protection
Electrical Connection	1 male connector M12 - B coding - 4 ways for bus IN 1 female connector M12 - B coding - 4 ways for bus OUT 4 female connectors M12 - A coding - 5 ways for sensor 1 male connector M8 - 4 ways for power IN 1 female connector M8 - 4 ways for power OUT
Local Signalling	2 LEDs for bus diagnostic 2 LEDs for sensor/actuator power supply status
Operating Position	Any position
Fixing Mode	By 2 screws
Net Weight	0.2 kg

Environment

Standards	IEC 61131-2
Product Certifications	GOST-R ATEX II 3g EEx nA II T5 C-Tick cURus
Marking	CE
Ambient Air Temperature For Operation	-10…60 °C

Disclaimer: This documentation is not intended as a substitute for and is not to be used for determining suitability or reliability of these products for specific user applications

Ambient Air Temperature For Storage	-25…85 °C
Relative Humidity	5…95 % without condensation or dripping water
Pollution Degree	2 conforming to IEC 60664
Ip Degree Of Protection	IP67 conforming to IEC 61131-2
Operating Altitude	0...2000 m
Storage Altitude	0…3000 m
Vibration Resistance	7.5 mm constant amplitude (f= 2…8 Hz) conforming to IEC 60721-3-5 Class 5M3 2 gn constant acceleration (f= 8…200 Hz) conforming to IEC 60721-3-5 Class 5M3 4 gn constant acceleration (f= 200…500 Hz) conforming to IEC 60721-3-5 Class 5M3
Shock Resistance	30 gn for 11 ms conforming to IEC 60721-3-5 Class 5M3
Resistance To Electrostatic Discharge	6 kV in contact conforming to IEC 61000-4-2 8 kV in air conforming to IEC 61000-4-2
Resistance To Electromagnetic Fields	10 V/m 0.08…2 Hz conforming to IEC 61000-4-3 1 V/m 2…2.7 Hz conforming to IEC 61000-4-3
Resistance To Fast Transients	2 kV (power supply) conforming to IEC 61000-4-4 1 kV (input/output) conforming to IEC 61000-4-4 1 kV (shielded cable) conforming to IEC 61000-4-4
Surge Withstand For Dc 24 V Circuit	1 kV power supply (common mode) conforming to IEC 61000-4-5 0.5 kV power supply (differential mode) conforming to IEC 61000-4-5 1 kV unshielded links (common mode) conforming to IEC 61000-4-5 0.5 kV unshielded links (differential mode) conforming to IEC 61000-4-5 1 kV shielded links (common mode) conforming to IEC 61000-4-5 0.5 kV shielded links (differential mode) conforming to IEC 61000-4-5
Electromagnetic Compatibility	EN/IEC 61000-4-6
Disturbance Radiated/Conducted	CISPR 11

Packing Units

Unit Type Of Package 1	PCE
Number Of Units In Package 1	1
Package 1 Height	5.000 cm
Package 1 Width	5.800 cm
Package 1 Length	10.600 cm
Package 1 Weight	217.000 g
Unit Type Of Package 2	S02
Number Of Units In Package 2	24
Package 2 Height	15.000 cm
Package 2 Width	30.000 cm
Package 2 Length	40.000 cm
Package 2 Weight	5.591 kg

Contractual warranty

Warranty	18 months

Sustainability

Green Premium™ label is Schneider Electric's commitment to delivering products with best-in-class environmental performance. Green Premium promises compliance with the latest regulations, transparency on environmental impacts, as well as circular and low-CO_2 products.

Guide to assessing product sustainability is a white paper that clarifies global eco-label standards and how to interpret environmental declarations.

Learn more about Green Premium >

Guide to assess a product's sustainability >

Transparency RoHS/REACh

Well-being performance

Toxic Heavy Metal Free	
Mercury Free	
Rohs Exemption Information	Yes
Pvc Free	

Certifications & Standards

Reach Regulation	REACh Declaration
Eu Rohs Directive	Pro-active compliance (Product out of EU RoHS legal scope)
China Rohs Regulation	China RoHS declaration
Environmental Disclosure	Product Environmental Profile
Weee	The product must be disposed on European Union markets following specific waste collection and never end up in rubbish bins
Circularity Profile	End of Life Information

Presentation

Analog Input Block

Description

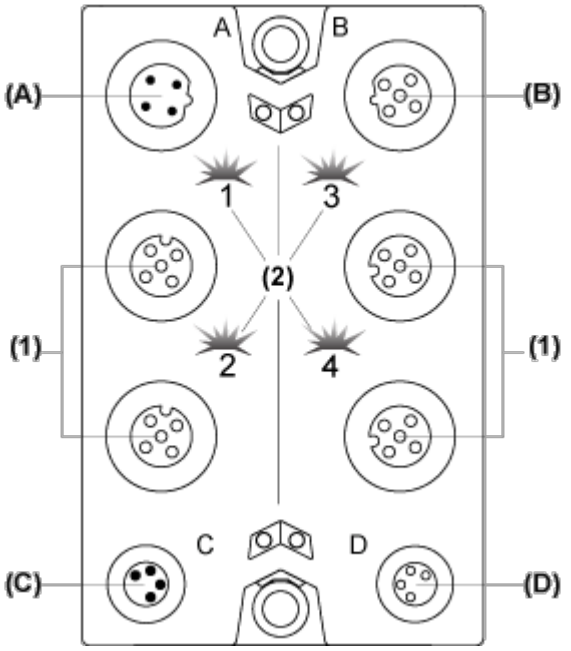

(A) TM7 bus IN connector

(B) TM7 bus OUT connector

(C) 24 Vdc power IN connector

(D) 24 Vdc power OUT connector

(1) Input connectors

(2) Status LEDs

Connector and Channel Assignments

Input connectors	Channel type	Channels
1	Input	I0
2	Input	I1
3	Input	I2
4	Input	I3

Dimensions Drawings

TM7 Block, Size 1

Dimensions

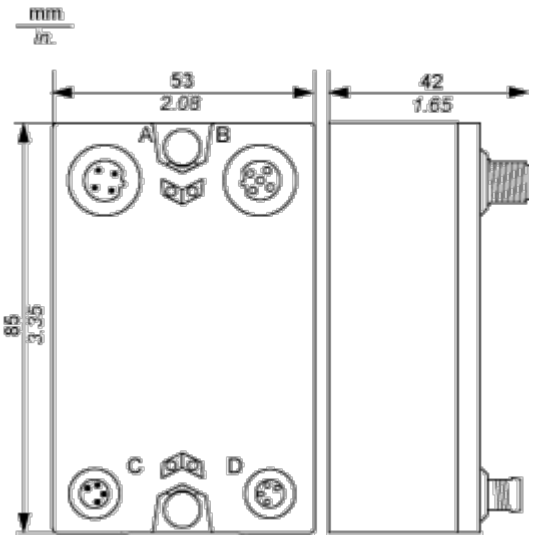

Mounting and Clearance

Spacing Requirements

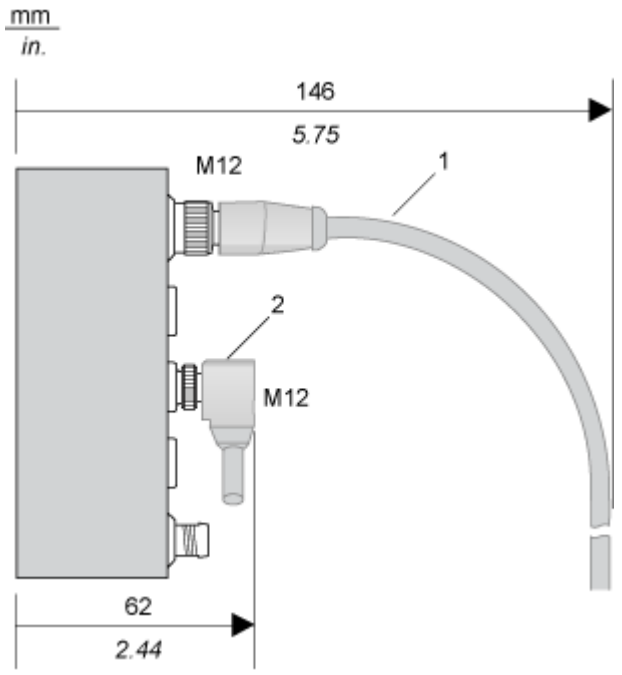

1 Straight cable

2 Elbowed cable

Installation Guidelines

TM7 Block on an Aluminium Frame

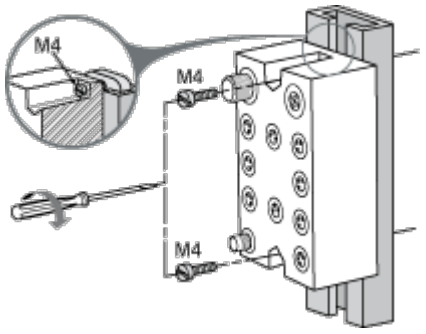

NOTE: Maximum torque to fasten the required M4 screws is 0.6 N.m (5.3 lbf-in).

TM7 Block on a DIN Rail

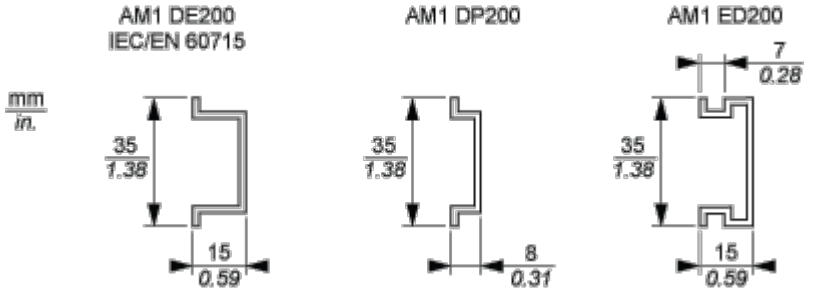

NOTE: Only size 1 (smallest) blocks can be installed on DIN rail with the TM7ACMP mounting plate.

TM7 Block Directly on the Machine

Drilling template of the block:

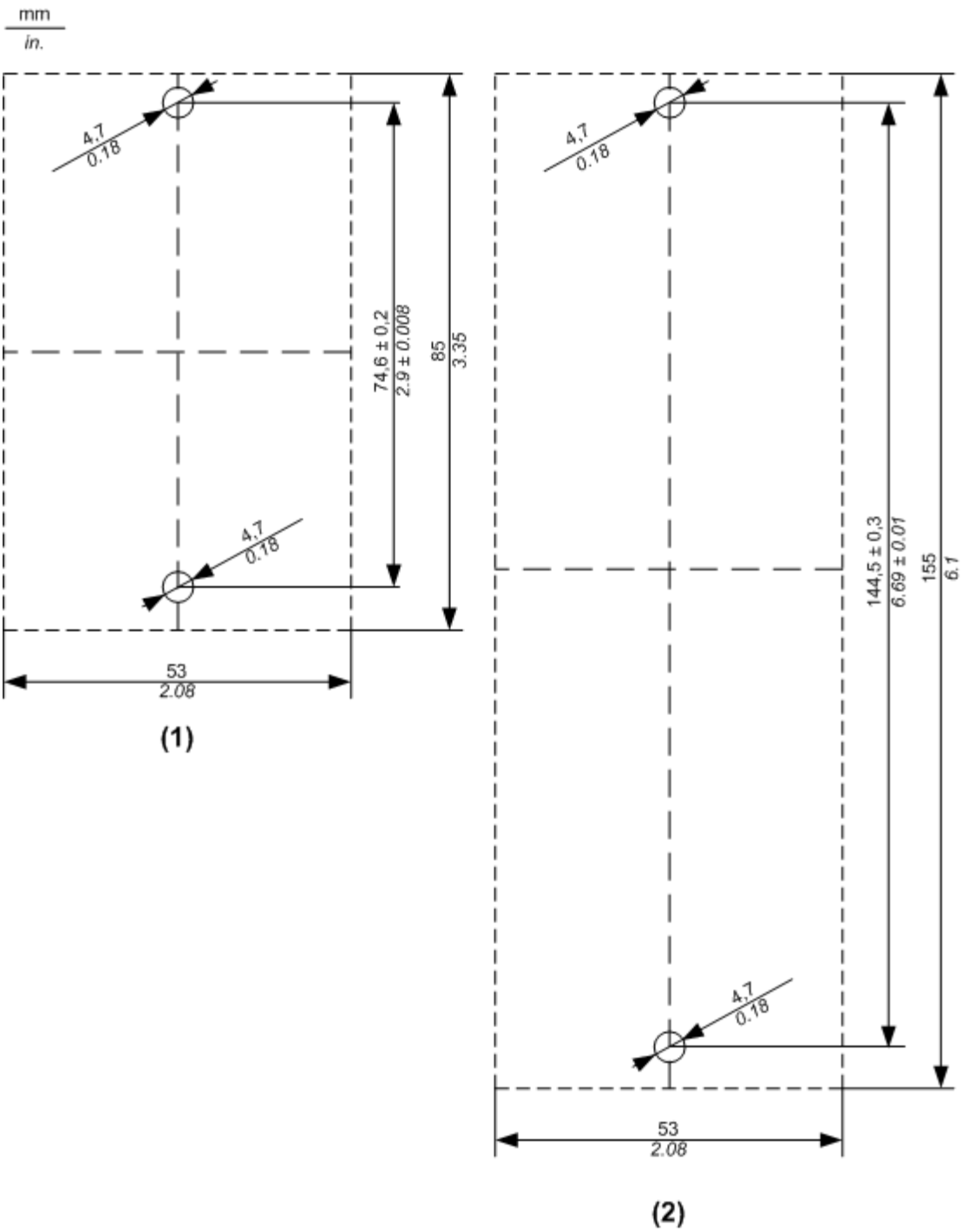

(1) Size 1

(2) Size 2

The thickness of the base plate should be taken into consideration when defining the screw length.

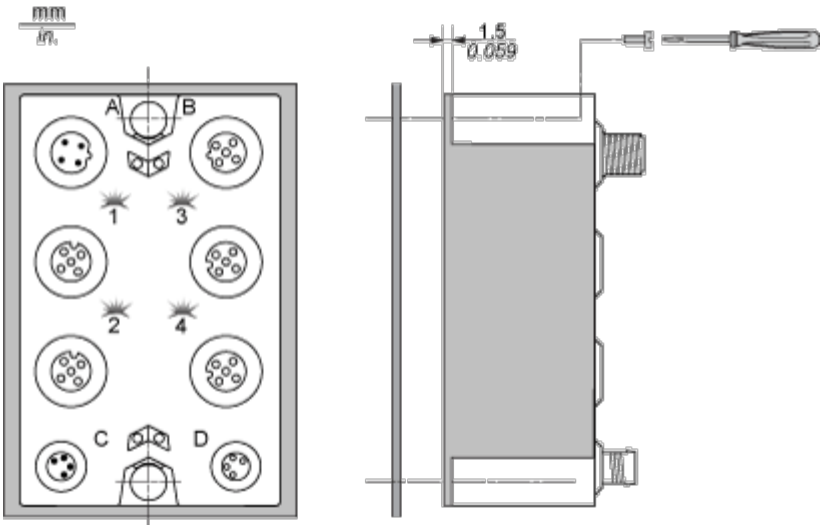

NOTE: Maximum torque to fasten the required M4 screws is 0.6 N.m (5.3 lbf-in).

Connections and Schema

Wiring Diagram

Pin Assignments for Input Connectors

Connection	Pin	M12 input
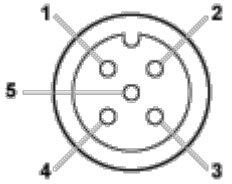	**1**	24 Vdc sensor supply
	2	Analog input +
	3	0 Vdc
	4	Analog input -
	5	Shield

Wiring the Power Supply

When you provide power to a TM7 I/O block using the 24 VDC Power OUT connector of the preceding I/O block, both blocks occupy the same 24 Vdc I/O power segment. However, if you connect an external isolated power supply to the 24 Vdc Power IN connector of a TM7 I/O block, you establish a new 24 Vdc I/O power segment beginning with that I/O block.
I/O block wired with one external 24 Vdc power supply:

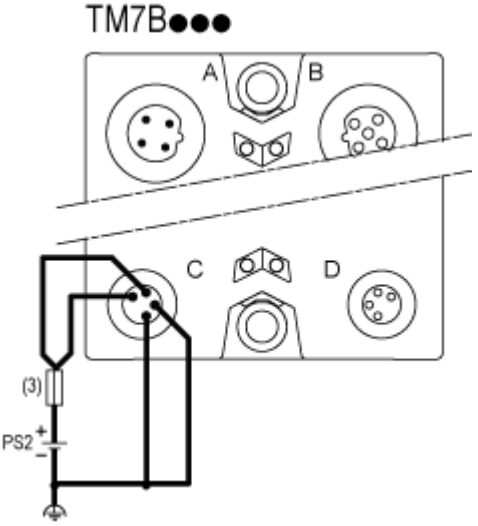

(3) External fuse, Type T slow-blow, 8 A max., 250 V

PS2 External isolated I/O power supply, 24 Vdc