Product datasheet

Specifications

power distribution module - for I/O module 24 V DC

TM5SPS1

EAN Code: 3595864074900

Main

Range Of Product	Modicon TM5
Product Or Component Type	Power distribution module
Product Specific Application	Supply 24 V DC I/O modules

Complementary

Range Compatibility	Modicon M258 Modicon LMC058
Product Compatibility	Logic controller Motion controller
[Us] Rated Supply Voltage	24 V
Network Type	DC
Current Supplied	10 A for I/O power segment
Maximum Power Dissipation In W	0.8 W
Colour	Grey
Short-Circuit Protection	10 A external fuse
Current Consumption	<= 25 mA 24 V DC
Marking	CE

Environment

Standards	CSA C22.2 No 142 CSA C22.2 No 213 UL 508 IEC 61131-2
Product Certifications	GOST-R C-Tick cULus CSA
Ambient Air Temperature For Operation	-10…55 °C without derating (horizontal installation) 55…60 °C with derating factor (horizontal installation) -10…50 °C (vertical installation)
Ambient Air Temperature For Storage	-25…70 °C
Relative Humidity	5…95 % without condensation
Operating Altitude	0...2000 m
Storage Altitude	0…3000 m
Vibration Resistance	1 gn at 8.4…150 Hz on DIN rail 3.5 mm at 5…8.4 Hz on DIN rail
Shock Resistance	15 gn for 11 ms

Disclaimer: This documentation is not intended as a substitute for and is not to be used for determining suitability or reliability of these products for specific user applications

Resistance To Electrostatic Discharge	4 kV on contact conforming to EN/IEC 61000-4-2 8 kV in air conforming to EN/IEC 61000-4-2
Resistance To Electromagnetic Fields	1 V/m 2...2.7 GHz conforming to EN/IEC 61000-4-3 10 V/m 80...2000 MHz conforming to EN/IEC 61000-4-3
Resistance To Fast Transients	1 kV (I/O) conforming to EN/IEC 61000-4-4 1 kV (shielded cable) conforming to EN/IEC 61000-4-4 2 kV (power lines) conforming to EN/IEC 61000-4-4
Surge Withstand	0.5 kV differential mode conforming to EN/IEC 61000-4-5 1 kV common mode conforming to EN/IEC 61000-4-5
Electromagnetic Compatibility	EN/IEC 61000-4-6
Disturbance Radiated/Conducted	CISPR 11

Packing Units

Unit Type Of Package 1	PCE
Number Of Units In Package 1	1
Package 1 Height	2.000 cm
Package 1 Width	6.000 cm
Package 1 Length	10.600 cm
Package 1 Weight	35.000 g
Unit Type Of Package 2	S02
Number Of Units In Package 2	97
Package 2 Height	15.000 cm
Package 2 Width	30.000 cm
Package 2 Length	40.000 cm
Package 2 Weight	3.847 kg

Contractual warranty

Warranty	18 months

Sustainability

Green Premium™ label is Schneider Electric's commitment to delivering products with best-in-class environmental performance. Green Premium promises compliance with the latest regulations, transparency on environmental impacts, as well as circular and low-CO_2 products.

Guide to assessing product sustainability is a white paper that clarifies global eco-label standards and how to interpret environmental declarations.

Learn more about Green Premium >

Guide to assess a product's sustainability >

Transparency RoHS/REACh

Well-being performance

Toxic Heavy Metal Free	
Mercury Free	
Rohs Exemption Information	Yes
Pvc Free	

Certifications & Standards

Reach Regulation	REACh Declaration
Eu Rohs Directive	Pro-active compliance (Product out of EU RoHS legal scope)
China Rohs Regulation	China RoHS declaration
Environmental Disclosure	Product Environmental Profile
Weee	The product must be disposed on European Union markets following specific waste collection and never end up in rubbish bins
Circularity Profile	End of Life Information

Dimensions Drawings

TM5 Slice

Dimensions

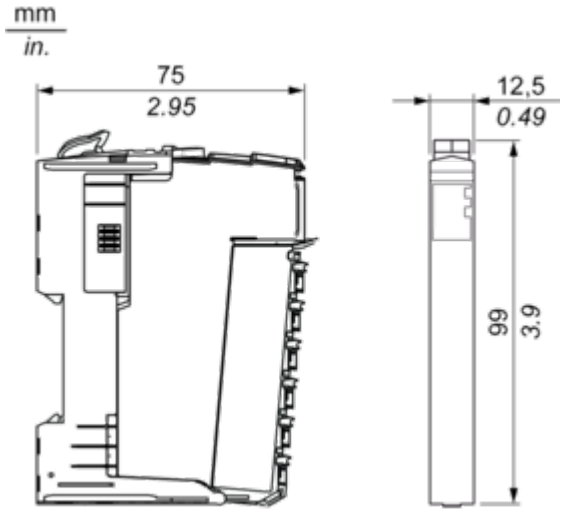

Mounting and Clearance

TM5 System

Spacing Requirements

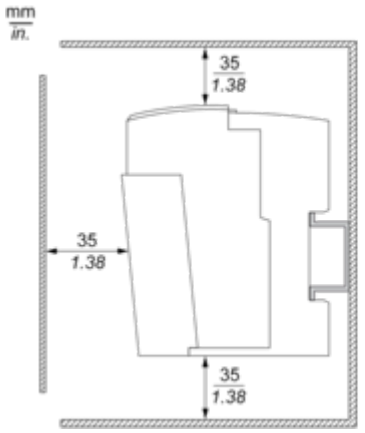

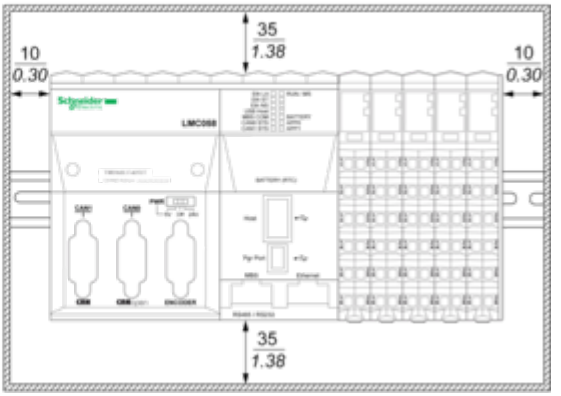

Mounting on a DIN Rail

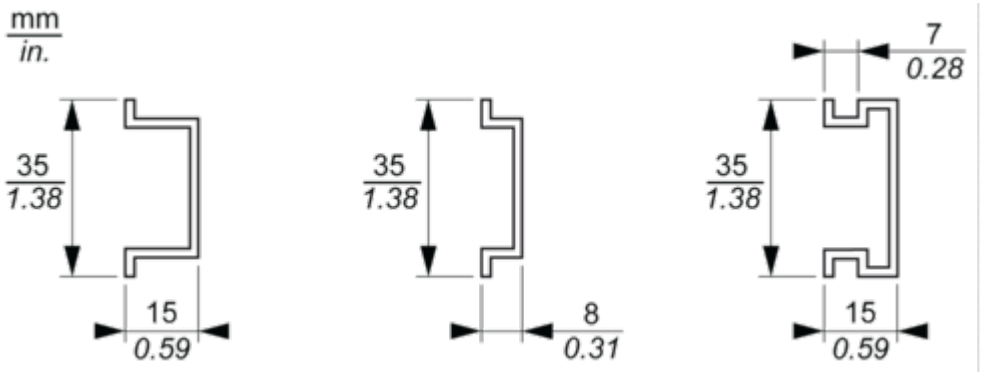

Connections and Schema

TM5 System Wiring Recommendations

Wire Sizes to Use with the Removable Spring Terminal Blocks

mm / in. 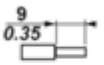				
mm²	0,08…2,5	0,25…2,5	0,25…1,5	2 x 0,25...2 x 0,75
AWG	28…14	24…14	24…16	2 x 24…2 x 18

PDM Electronic Module 24 Vdc I/O

Wiring Diagram

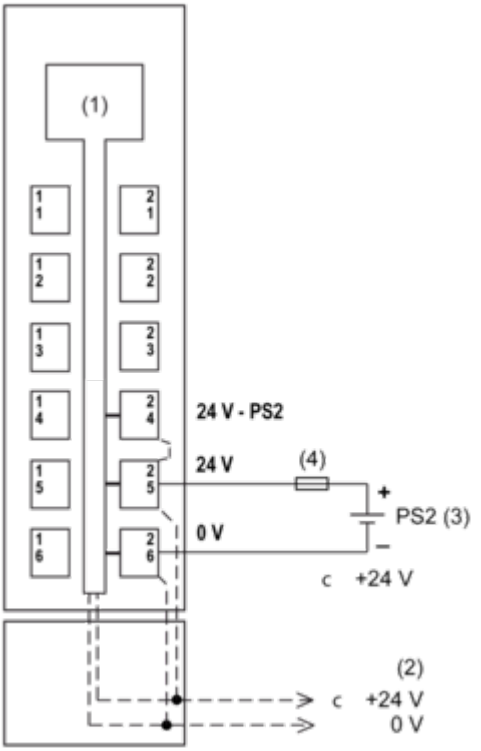

(1) Internal electronics
(2) 24 Vdc I/O power segment integrated into the bus bases
(3) PS2: External isolated SELV power supply 24 Vdc limited to 200 VA for UL508 conformance, or limited to 150 VA for CSA 22.2, N° 142
(4) External fuse type T slow-blow 10 A max. 250 V