Product datasheet

Specifications

Green Premium™

common distribution module - 6 x 0 V DC - 6 x 24 V DC

TM5SPDG6D6F

EAN Code: 3595864074986

Main

Range Of Product	Modicon TM5
Product Or Component Type	Power distribution module
Product Specific Application	Cabling various voltage to power 6 I/O in 0 V DC & 6 I/O in 24 V DC

Complementary

Range Compatibility	Modicon LMC058 Modicon M258
Product Compatibility	Motion controller Logic controller
[Us] Rated Supply Voltage	24 V
Network Type	DC
Short-Circuit Protection	6.3 A internal fuse
Marking	CE
Net Weight	0.025 kg

Environment

Standards	UL 508 IEC 61131-2 CSA C22.2 No 213 CSA C22.2 No 142
Product Certifications	GOST-R C-Tick CSA cULus
Ambient Air Temperature For Operation	0…50 °C (vertical installation) 0…55 °C without derating (horizontal installation) 0…60 °C with derating factor (horizontal installation)
Ambient Air Temperature For Storage	-25…70 °C
Relative Humidity	5…95 % without condensation
Ip Degree Of Protection	IP20 conforming to IEC 61131-2
Pollution Degree	2 conforming to IEC 60664
Operating Altitude	0...2000 m
Storage Altitude	0…3000 m
Vibration Resistance	1 gn at 8.4…150 Hz on DIN rail 3.5 mm at 5…8.4 Hz on DIN rail
Shock Resistance	15 gn for 11 ms

Disclaimer: This documentation is not intended as a substitute for and is not to be used for determining suitability or reliability of these products for specific user applications

Resistance To Electrostatic Discharge	4 kV on contact conforming to IEC 61000-4-2 8 kV in air conforming to IEC 61000-4-2
Resistance To Electromagnetic Fields	1 V/m 2...2.7 GHz conforming to IEC 61000-4-3 10 V/m 80...2000 MHz conforming to IEC 61000-4-3
Resistance To Fast Transients	1 kV (I/O) conforming to IEC 61000-4-4 1 kV (shielded cable) conforming to IEC 61000-4-4 2 kV (power lines) conforming to IEC 61000-4-4
Surge Withstand	0.5 kV differential mode conforming to IEC 61000-4-5 1 kV common mode conforming to IEC 61000-4-5
Electromagnetic Compatibility	EN/IEC 61000-4-6
Disturbance Radiated/Conducted	CISPR 11

Packing Units

Unit Type Of Package 1	PCE
Number Of Units In Package 1	1
Package 1 Height	1.900 cm
Package 1 Width	5.900 cm
Package 1 Length	10.400 cm
Package 1 Weight	39.000 g
Unit Type Of Package 2	S02
Number Of Units In Package 2	97
Package 2 Height	15.000 cm
Package 2 Width	30.000 cm
Package 2 Length	40.000 cm
Package 2 Weight	4.135 kg

Contractual warranty

Warranty	18 months

Sustainability

Green Premium™ label is Schneider Electric's commitment to delivering products with best-in-class environmental performance. Green Premium promises compliance with the latest regulations, transparency on environmental impacts, as well as circular and low-CO_2 products.

Guide to assessing product sustainability is a white paper that clarifies global eco-label standards and how to interpret environmental declarations.

Learn more about Green Premium >

Guide to assess a product's sustainability >

Transparency RoHS/REACh

Well-being performance

Toxic Heavy Metal Free	
Mercury Free	
Rohs Exemption Information	Yes
Pvc Free	

Certifications & Standards

Reach Regulation	REACh Declaration
Eu Rohs Directive	Pro-active compliance (Product out of EU RoHS legal scope)
China Rohs Regulation	China RoHS declaration
Environmental Disclosure	Product Environmental Profile
Weee	The product must be disposed on European Union markets following specific waste collection and never end up in rubbish bins
Circularity Profile	End of Life Information

Dimensions Drawings

TM5 Slice

Dimensions

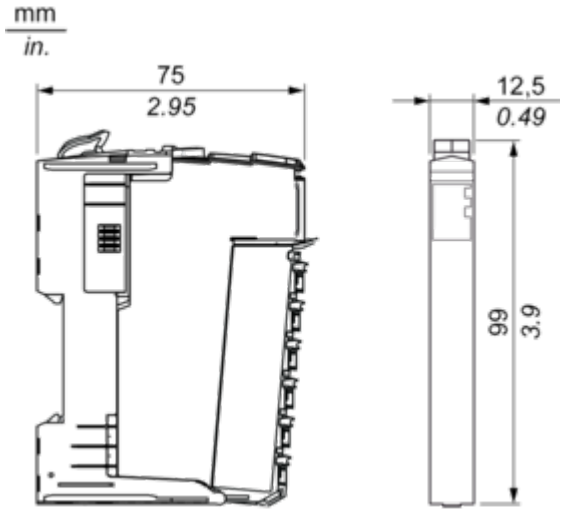

Mounting and Clearance

TM5 System

Spacing Requirements

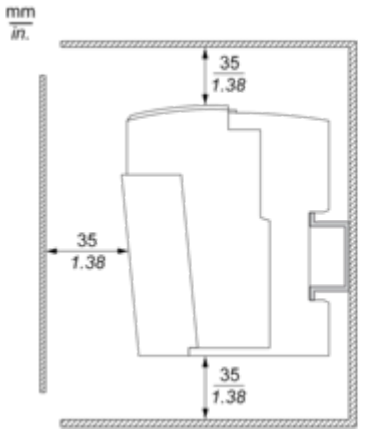

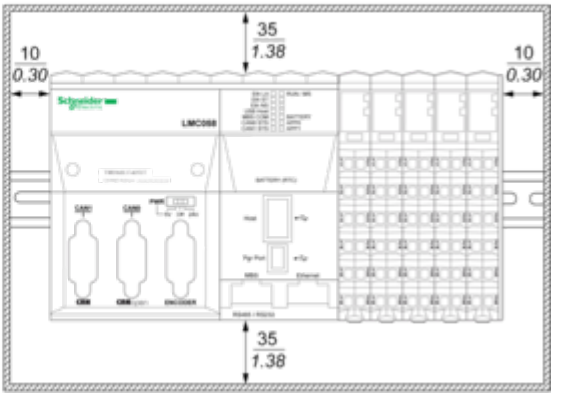

Mounting on a DIN Rail

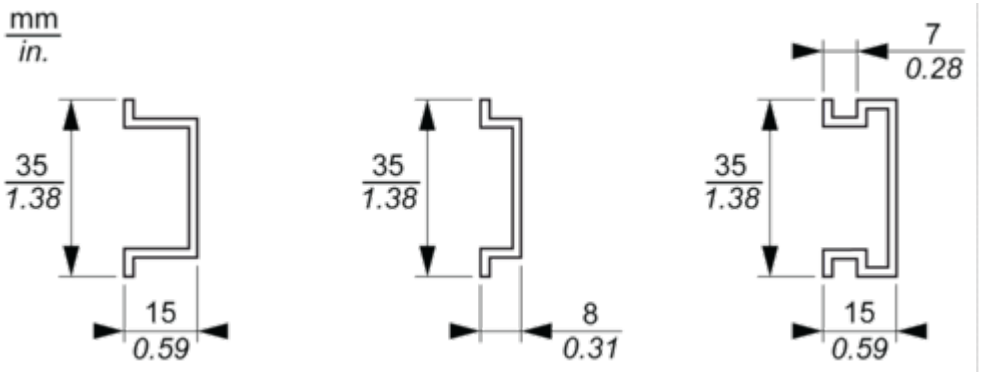

Connections and Schema

TM5 System Wiring Recommendations

Wire Sizes to Use with the Removable Spring Terminal Blocks

mm / in. 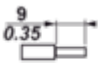				
mm²	0,08…2,5	0,25…2,5	0,25…1,5	2 x 0,25...2 x 0,75
AWG	28…14	24…14	24…16	2 x 24…2 x 18

Electronic Module 6 x 0 Vdc and 6 x 24 Vdc

Wiring Diagrams

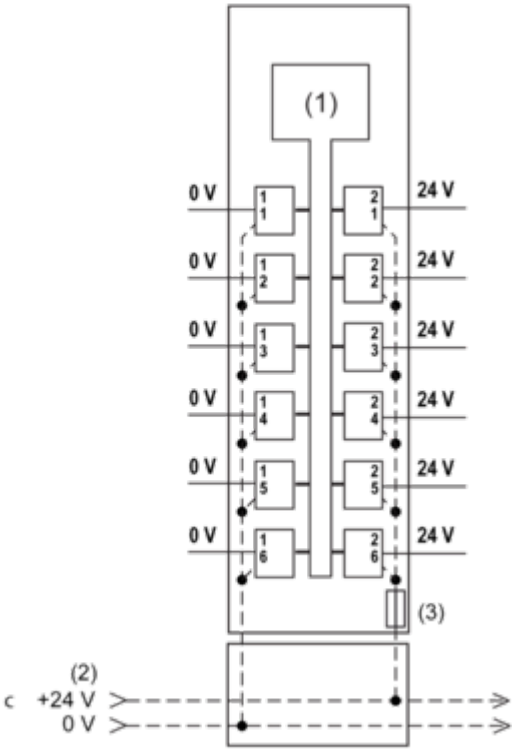

(1) Internal electronics
(2) 24 Vdc I/O power segment integrated into the bus bases
(3) Integrated fuse type T slow-blow 6.3 A 250 V exchangeable
The following figure shows the wiring diagram with a TM5SDI6D:

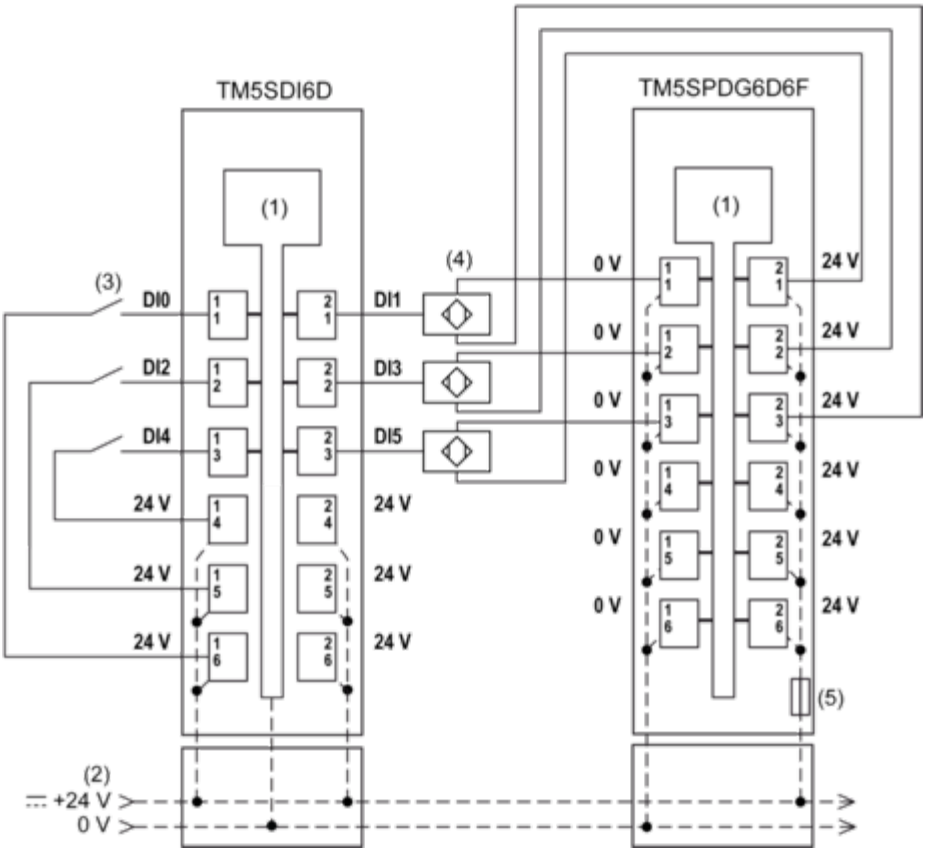

(1) Internal electronics
(2) 24 Vdc I/O power segment integrated into the bus bases
(3) 2-wire sensor
(4) 3-wire sensor
(5) Integrated fuse type T slow-blow 6.3 A 250 V exchangeable