Product datasheet

Specifications

digital input module - 4I - 24V DC sink - 3 wires

TM5SDI4D

EAN Code: 3595864074436

Main

Range Of Product	Modicon TM5
Product Or Component Type	Discrete input module
Discrete Input Number	4
Discrete Input Voltage	24 V

Complementary

Range Compatibility	Modicon M258 PacDrive LMC motion controller Modicon LMC058
Product Compatibility	Logic controller Motion controller PacDrive LMC Pro PacDrive LMC Eco PacDrive LMC Pro 2
Discrete Input Voltage Type	DC
Input Voltage Limits	20.4...28.8 V
Discrete Input Logic	Sink
Discrete Input Current	3.75 mA
Input Impedance	6.4 kOhm
Colour	White
Voltage State 0 Guaranteed	<= 5 V
Voltage State 1 Guaranteed	>= 15 V
Input Filtering	<= 25 ms configurable by software <= 100 ms hardware
Protection Type	Short-circuit protection Overload protection
Isolation	No insulation between channels 500 Vrms AC insulation between channel and bus
Maximum Voltage Drop	<2 V at 500 mA for sensor supply
Maximum Supply Current For Sensors	500 mA
Current Consumption	28 mA at 5 V DC bus 25 mA at 24 V DC all inputs On
Maximum Power Dissipation In W	0.73 W
Local Signalling	1 LED green for power supply 1 LED red for power supply 4 LEDs green for input status
Electrical Connection	3 wires

Disclaimer: This documentation is not intended as a substitute for and is not to be used for determining suitability or reliability of these products for specific user applications

Marking	CE
Net Weight	0.025 kg

Environment

Standards	IEC 61131-2 CSA C22.2 No 142 UL 508 CSA C22.2 No 213
Product Certifications	CSA C-Tick cULus GOST-R
Ambient Air Temperature For Operation	-10…55 °C without derating (horizontal installation) -10…60 °C with derating factor (horizontal installation) -10…50 °C (vertical installation)
Ambient Air Temperature For Storage	-40…70 °C
Relative Humidity	5…95 % without condensation
Ip Degree Of Protection	IP20 conforming to IEC 61131-2
Pollution Degree	2 conforming to IEC 60664
Operating Altitude	0...2000 m
Storage Altitude	0…3000 m
Vibration Resistance	1 gn at 8.4…150 Hz on DIN rail 3.5 mm at 5…8.4 Hz on DIN rail
Shock Resistance	15 gn for 11 ms
Electromagnetic Compatibility	Electrostatic discharge immunity test, 4 kV on contact conforming to IEC 61000-4-2 Electrostatic discharge immunity test, 8 kV in air conforming to IEC 61000-4-2 Susceptibility to electromagnetic fields, 1 V/m 2...2.7 GHz conforming to IEC 61000-4-3 Susceptibility to electromagnetic fields, 10 V/m 80...2000 MHz conforming to IEC 61000-4-3 Electrical fast transient/burst immunity test, 1 kV I/O conforming to IEC 61000-4-4 Electrical fast transient/burst immunity test, 1 kV shielded cable conforming to IEC 61000-4-4 Electrical fast transient/burst immunity test, 2 kV power lines conforming to IEC 61000-4-4 1.2/50 µs shock waves immunity test, 0.5 kV differential mode conforming to IEC 61000-4-5 1.2/50 µs shock waves immunity test, 1 kV common mode conforming to IEC 61000-4-5 Conducted RF disturbances conforming to IEC 61000-4-6 Conducted and radiated emissions conforming to CISPR 11

Packing Units

Unit Type Of Package 1	PCE
Number Of Units In Package 1	1
Package 1 Height	2.000 cm
Package 1 Width	6.000 cm
Package 1 Length	10.500 cm
Package 1 Weight	37.000 g
Unit Type Of Package 2	S02
Number Of Units In Package 2	97
Package 2 Height	15.000 cm
Package 2 Width	30.000 cm

Package 2 Length	40.000 cm
Package 2 Weight	3.841 kg

Contractual warranty

Warranty	18 months

Sustainability

Green Premium™ label is Schneider Electric's commitment to delivering products with best-in-class environmental performance. Green Premium promises compliance with the latest regulations, transparency on environmental impacts, as well as circular and low-CO_2 products.

Guide to assessing product sustainability is a white paper that clarifies global eco-label standards and how to interpret environmental declarations.

Learn more about Green Premium >

Guide to assess a product's sustainability >

Transparency RoHS/REACh

Well-being performance

Toxic Heavy Metal Free	
Mercury Free	
Rohs Exemption Information	Yes
Pvc Free	

Certifications & Standards

Reach Regulation	REACh Declaration
Eu Rohs Directive	Pro-active compliance (Product out of EU RoHS legal scope)
China Rohs Regulation	China RoHS declaration
Environmental Disclosure	Product Environmental Profile
Weee	The product must be disposed on European Union markets following specific waste collection and never end up in rubbish bins
Circularity Profile	End of Life Information

Dimensions Drawings

TM5 Slice

Dimensions

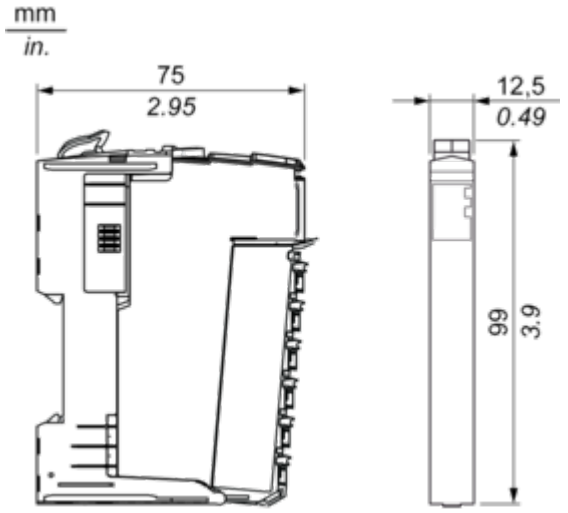

Mounting and Clearance

TM5 System

Spacing Requirements

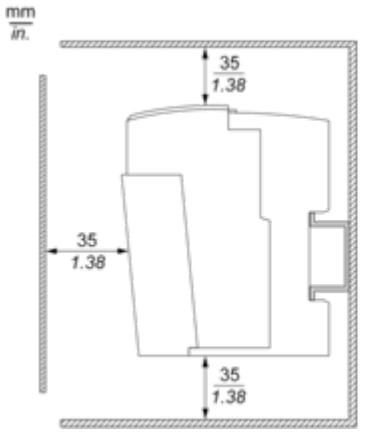

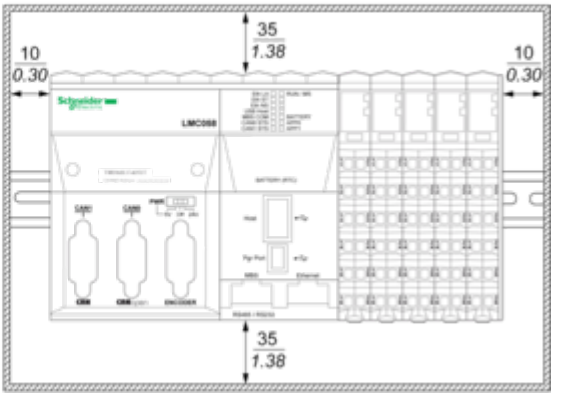

Mounting on a DIN Rail

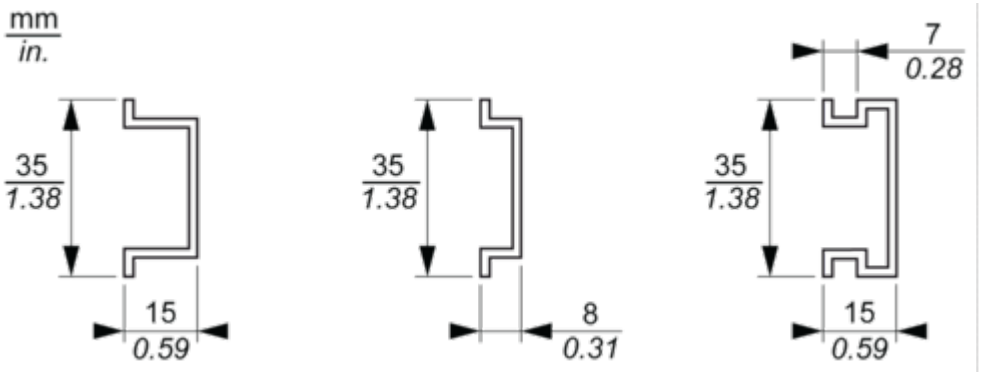

Connections and Schema

TM5 System Wiring Recommendations

Wire Sizes to Use with the Removable Spring Terminal Blocks

mm / in. 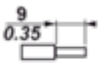				
mm²	0,08…2,5	0,25…2,5	0,25…1,5	2 x 0,25...2 x 0,75
AWG	28…14	24…14	24…16	2 x 24…2 x 18

Electronic Module 4DI 24 Vdc Sink 3 Wires

Wiring Diagram

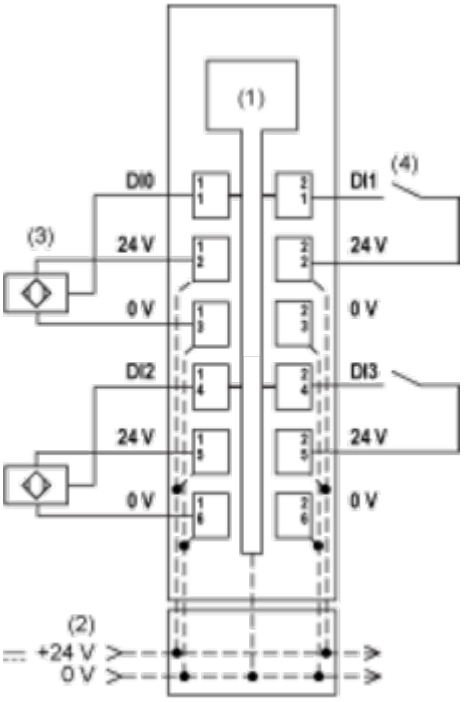

(1) Internal electronics
(2) 24 Vdc I/O power segment integrated into the bus bases
(3) 3-wire sensor
(4) 2-wire sensor