Product datasheet

Specifications

digital input module - 12I - 24V DC sink - 1 wire

TM5SDI12D

EAN Code: 3595864074450

Main

Range Of Product	Modicon TM5
Product Or Component Type	Discrete input module
Discrete Input Number	12
Discrete Input Voltage	24 V

Complementary

Range Compatibility	PacDrive LMC motion controller Modicon M258 Modicon LMC058
Product Compatibility	Motion controller PacDrive LMC Pro PacDrive LMC Pro 2 Logic controller PacDrive LMC Eco
Discrete Input Voltage Type	DC
Input Voltage Limits	20.4...28.8 V
Discrete Input Logic	Sink
Discrete Input Current	3.75 mA
Input Impedance	6.4 kOhm
Colour	White
Voltage State 0 Guaranteed	<= 5 V
Voltage State 1 Guaranteed	>= 15 V
Input Filtering	<= 25 ms configurable by software <= 100 ms hardware
Isolation	500 Vrms AC insulation between channel and bus No insulation between channels
Current Consumption	36 mA at 5 V DC bus 73 mA at 24 V DC all inputs On
Maximum Power Dissipation In W	1.93 W
Local Signalling	1 LED green for power supply 1 LED red for power supply 12 LEDs green for input status
Electrical Connection	1 wire
Marking	CE
Net Weight	0.025 kg

Environment

Disclaimer: This documentation is not intended as a substitute for and is not to be used for determining suitability or reliability of these products for specific user applications

Standards	CSA C22.2 No 213 IEC 61131-2 UL 508 CSA C22.2 No 142
Product Certifications	cULus C-Tick GOST-R CSA
Ambient Air Temperature For Operation	-10…55 °C without derating (horizontal installation) -10…60 °C with derating factor (horizontal installation) -10…50 °C (vertical installation)
Ambient Air Temperature For Storage	-40…70 °C
Relative Humidity	5…95 % without condensation
Ip Degree Of Protection	IP20 conforming to IEC 61131-2
Pollution Degree	2 conforming to IEC 60664
Operating Altitude	0...2000 m
Storage Altitude	0…3000 m
Vibration Resistance	1 gn at 8.4…150 Hz on DIN rail 3.5 mm at 5…8.4 Hz on DIN rail
Shock Resistance	15 gn for 11 ms
Electromagnetic Compatibility	Electrostatic discharge immunity test, 4 kV on contact conforming to IEC 61000-4-2 Electrostatic discharge immunity test, 8 kV in air conforming to IEC 61000-4-2 Susceptibility to electromagnetic fields, 1 V/m 2...2.7 GHz conforming to IEC 61000-4-3 Susceptibility to electromagnetic fields, 10 V/m 80...2000 MHz conforming to IEC 61000-4-3 Electrical fast transient/burst immunity test, 1 kV I/O conforming to IEC 61000-4-4 Electrical fast transient/burst immunity test, 1 kV shielded cable conforming to IEC 61000-4-4 Electrical fast transient/burst immunity test, 2 kV power lines conforming to IEC 61000-4-4 1.2/50 µs shock waves immunity test, 0.5 kV differential mode conforming to IEC 61000-4-5 1.2/50 µs shock waves immunity test, 1 kV common mode conforming to IEC 61000-4-5 Conducted RF disturbances conforming to IEC 61000-4-6 Conducted and radiated emissions conforming to CISPR 11

Packing Units

Unit Type Of Package 1	PCE
Number Of Units In Package 1	1
Package 1 Height	2.000 cm
Package 1 Width	6.000 cm
Package 1 Length	10.500 cm
Package 1 Weight	36.000 g
Unit Type Of Package 2	S02
Number Of Units In Package 2	97
Package 2 Height	15.000 cm
Package 2 Width	30.000 cm
Package 2 Length	40.000 cm
Package 2 Weight	3.866 kg

Contractual warranty

Warranty	18 months

Sustainability

Green Premium™ label is Schneider Electric's commitment to delivering products with best-in-class environmental performance. Green Premium promises compliance with the latest regulations, transparency on environmental impacts, as well as circular and low-CO_2 products.

Guide to assessing product sustainability is a white paper that clarifies global eco-label standards and how to interpret environmental declarations.

Learn more about Green Premium >

Guide to assess a product's sustainability >

Transparency RoHS/REACh

Well-being performance

Reach Free Of Svhc	
Toxic Heavy Metal Free	
Mercury Free	
Rohs Exemption Information	Yes
Pvc Free	

Certifications & Standards

Reach Regulation	REACh Declaration
Eu Rohs Directive	Pro-active compliance (Product out of EU RoHS legal scope) EU RoHS Declaration
China Rohs Regulation	China RoHS declaration
Environmental Disclosure	Product Environmental Profile
Weee	The product must be disposed on European Union markets following specific waste collection and never end up in rubbish bins
Circularity Profile	End of Life Information

Dimensions Drawings

TM5 Slice

Dimensions

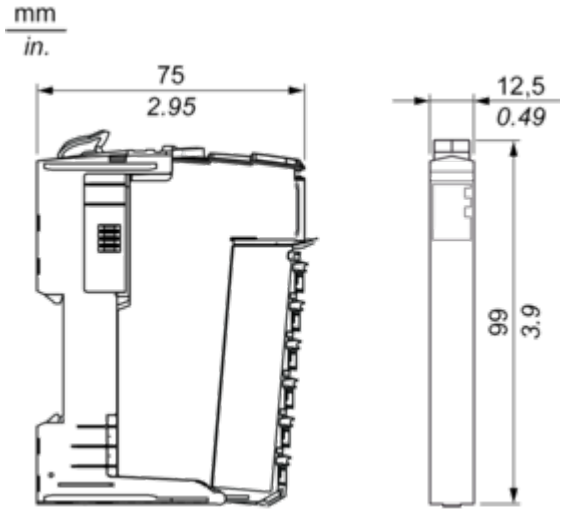

Mounting and Clearance

TM5 System

Spacing Requirements

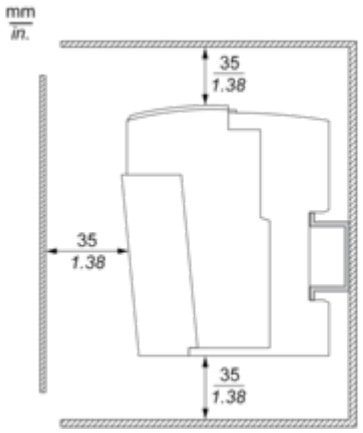

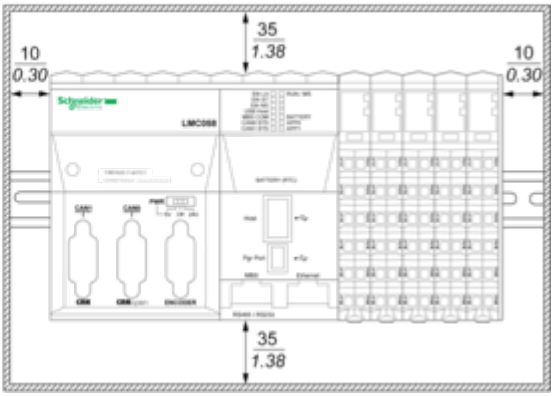

Mounting on a DIN Rail

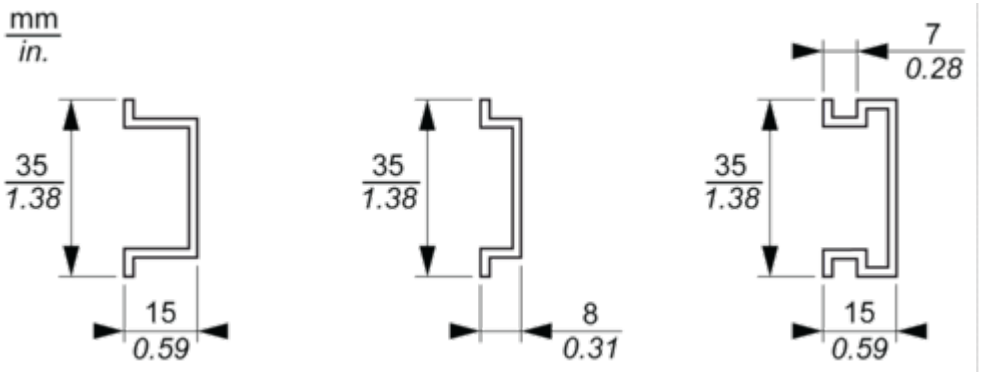

Connections and Schema

TM5 System Wiring Recommendations

Wire Sizes to Use with the Removable Spring Terminal Blocks

mm / in. 9 / 0.35				
mm²	0,08…2,5	0,25…2,5	0,25…1,5	2 x 0,25...2 x 0,75
AWG	28…14	24…14	24…16	2 x 24…2 x 18

Electronic Module 12DI 24 Vdc Sink 1 Wire

Wiring Diagrams

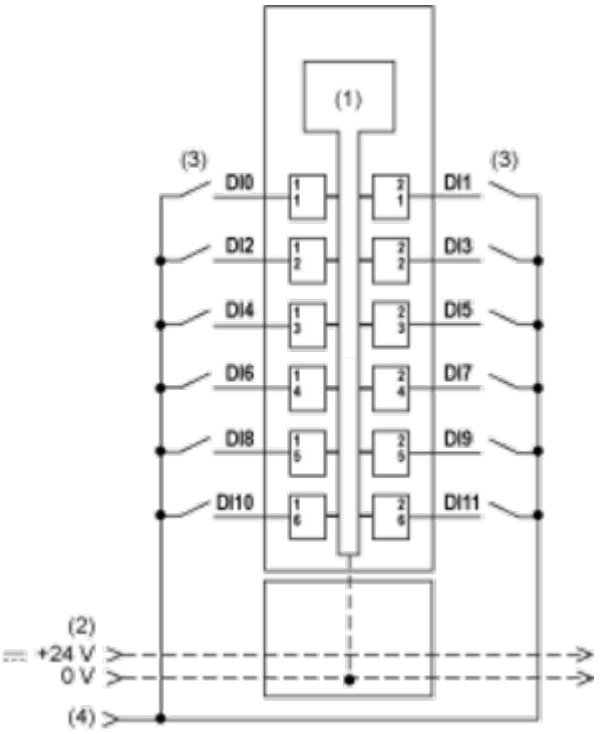

(1) Internal electronics
(2) 24 Vdc I/O power segment integrated into the bus bases
(3) 2 wire-sensor
(4) 24 Vdc I/O power segment by external connection
To connect 2-wire devices, you can add a TM5SPDD12F Common Distribution module:

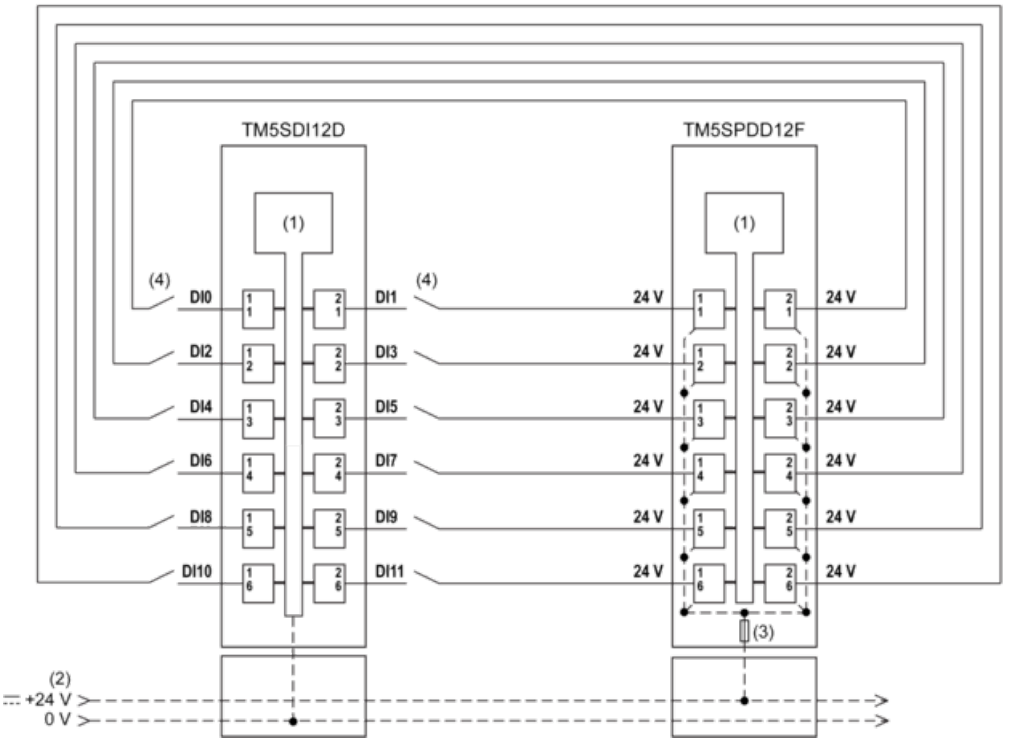

(1) Internal electronics

(2) 24 Vdc I/O power segment integrated into the bus bases
(3) Integrated fuse type T slow-blow 6.3 A 250 V exchangeable
(4) 2 wire-sensor