Product datasheet

Specifications

Green Premium™

analog output module - 4O - +/-10 V/0..20 mA - 16 bits

TM5SAO4H

EAN Code: 3595864074825

Main

Range Of Product	Modicon TM5
Product Or Component Type	Analog output module
Analogue Output Number	4
Analogue Output Resolution	15 bits + sign, +/- 10 V 15 bits, 0...20 mA

Complementary

Range Compatibility	Modicon M258 Modicon LMC058
Product Compatibility	Logic controller Motion controller
Analogue Output Type	Current 0...20 mA Voltage +/- 10 V
Measurement Resolution	305.176 µV, +/- 10 V 610.352 nA, 0...20 mA
Colour	White
Response Time	<= 1 ms
Minimum Output Impedance	1 Ohm
Sampling Duration	50 µs
Measurement Error	< 0.04 % of full scale +/- 10 V at 25 °C < 0.04 % of full scale 0...20 mA at 25 °C
Temperature Coefficient	0.01 %FS/°C, analogue output type: current 0.01 %FS/°C, analogue output type: voltage
Non-Linearity	< 0.005 %FS, analogue output type: current < 0.005 %FS, analogue output type: voltage
Type Of Cable	Shielded cable
Isolation	No insulation between channels 500 Vrms AC insulation between channel and bus
Supply	Internal
[Us] Rated Supply Voltage	24 V DC -15...20 %
Local Signalling	1 LED green for power supply 1 LED red for power supply 4 LEDs yellow for output status
Current Consumption	2 mA at 5 V DC bus 63 mA at 24 V DC input/output
Maximum Power Dissipation In W	1.51 W
Marking	CE

Disclaimer: This documentation is not intended as a substitute for and is not to be used for determining suitability or reliability of these products for specific user applications

Net Weight	0.025 kg

Environment

Standards	IEC 61131-2 CSA C22.2 No 213 UL 508 CSA C22.2 No 142
Product Certifications	CSA C-Tick cULus GOST-R
Ambient Air Temperature For Operation	0…55 °C without derating (horizontal installation) 0…60 °C with derating factor (horizontal installation) 0…50 °C (vertical installation)
Ambient Air Temperature For Storage	-25…70 °C
Relative Humidity	5…95 % without condensation
Ip Degree Of Protection	IP20 conforming to IEC 61131-2
Pollution Degree	2 conforming to IEC 60664
Operating Altitude	0...2000 m
Storage Altitude	0…3000 m
Vibration Resistance	1 gn at 8.4…150 Hz on DIN rail 3.5 mm at 5…8.4 Hz on DIN rail
Shock Resistance	15 gn for 11 ms
Resistance To Electrostatic Discharge	4 kV on contact conforming to IEC 61000-4-2 8 kV in air conforming to IEC 61000-4-2
Resistance To Electromagnetic Fields	1 V/m 2...2.7 GHz conforming to IEC 61000-4-3 10 V/m 80...2000 MHz conforming to IEC 61000-4-3
Resistance To Fast Transients	1 kV (I/O) conforming to IEC 61000-4-4 1 kV (shielded cable) conforming to IEC 61000-4-4 2 kV (power lines) conforming to IEC 61000-4-4
Surge Withstand	0.5 kV differential mode conforming to IEC 61000-4-5 1 kV common mode conforming to IEC 61000-4-5
Electromagnetic Compatibility	EN/IEC 61000-4-6
Disturbance Radiated/Conducted	CISPR 11

Packing Units

Unit Type Of Package 1	PCE
Number Of Units In Package 1	1
Package 1 Height	1.900 cm
Package 1 Width	5.900 cm
Package 1 Length	10.400 cm
Package 1 Weight	40.000 g
Unit Type Of Package 2	S02
Number Of Units In Package 2	97
Package 2 Height	15.000 cm
Package 2 Width	30.000 cm
Package 2 Length	40.000 cm
Package 2 Weight	4.131 kg

Contractual warranty

Warranty	18 months

Sustainability

Green Premium™ label is Schneider Electric's commitment to delivering products with best-in-class environmental performance. Green Premium promises compliance with the latest regulations, transparency on environmental impacts, as well as circular and low-CO_2 products.

Guide to assessing product sustainability is a white paper that clarifies global eco-label standards and how to interpret environmental declarations.

Learn more about Green Premium >

Guide to assess a product's sustainability >

Transparency RoHS/REACh

Well-being performance

Reach Free Of Svhc	
Toxic Heavy Metal Free	
Mercury Free	
Rohs Exemption Information	Yes
Pvc Free	

Certifications & Standards

Reach Regulation	REACh Declaration
Eu Rohs Directive	Pro-active compliance (Product out of EU RoHS legal scope) EU RoHS Declaration
China Rohs Regulation	China RoHS declaration
Environmental Disclosure	Product Environmental Profile
Weee	The product must be disposed on European Union markets following specific waste collection and never end up in rubbish bins
Circularity Profile	End of Life Information

Dimensions Drawings

TM5 Slice

Dimensions

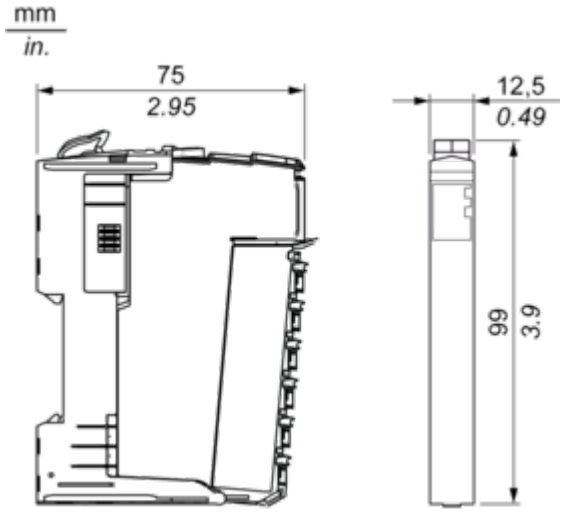

Mounting and Clearance

TM5 System

Spacing Requirements

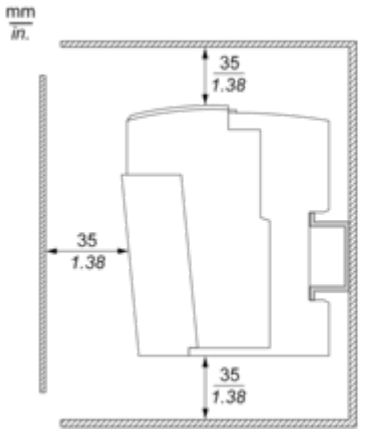

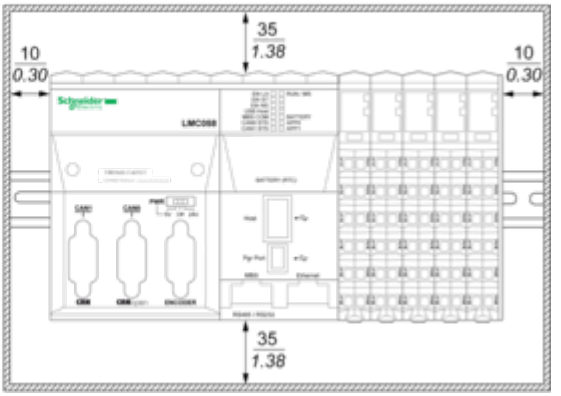

Mounting on a DIN Rail

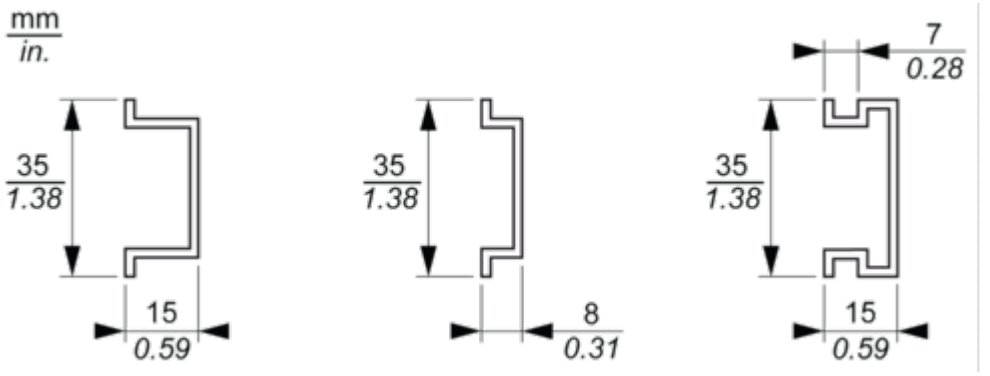

Connections and Schema

TM5 System Wiring Recommendations

Wire Sizes to Use with the Removable Spring Terminal Blocks

mm / in. 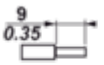				
mm²	0,08…2,5	0,25…2,5	0,25…1,5	2 x 0,25...2 x 0,75
AWG	28…14	24…14	24…16	2 x 24…2 x 18

Electronic Module 4AO ±10V/0-20mA 16 Bits

Wiring Diagram

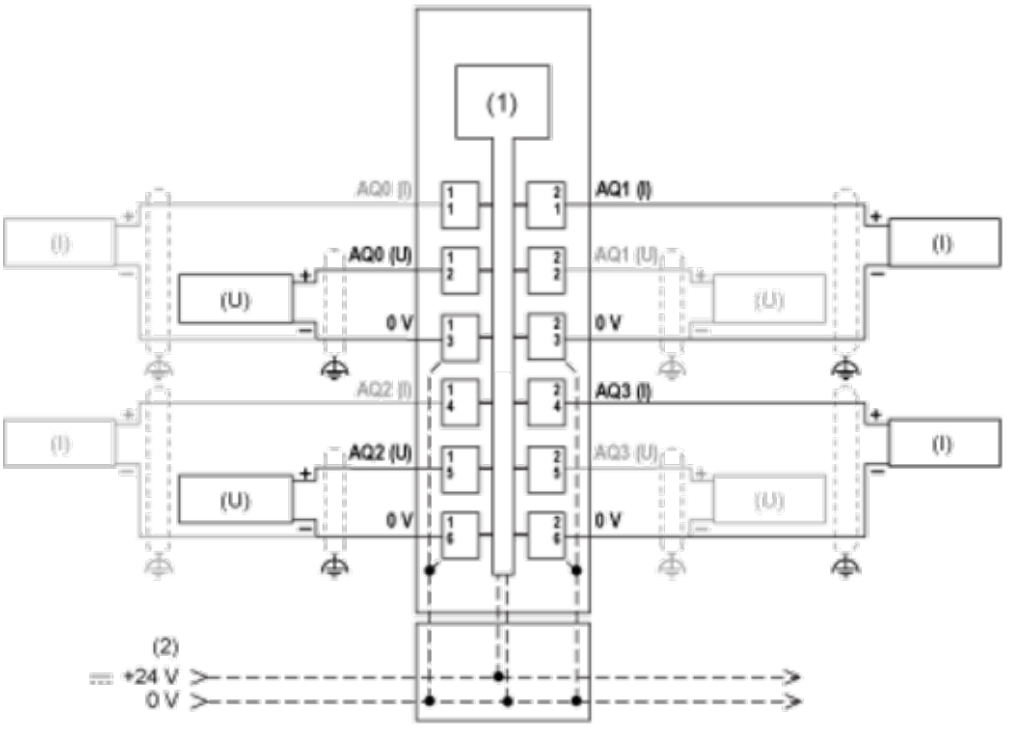

(1) Internal electronics
(2) 24 Vdc I/O power segment integrated into the bus bases
(I) Current
(U) Voltage