Product datasheet

Specifications

SERCOS III field bus interface module

TM5NS31

EAN Code: 3595864109091

Main

Range Of Product	Modicon TM5
Product Or Component Type	Sercos III communication module
Physical Interface	RJ45

Complementary

Range Compatibility	Modicon LMC078
Product Compatibility	Motion controller
Integrated Connection Type	Ethernet/IP, 2 RJ45 connectors Sercos, 100 Mbit/s
Current Consumption	350 mA at 5 V DC, base
Device Composition	Interface module Bus base ordered separately Power supply ordered separately Terminal block ordered separately
Maximum Power Dissipation In W	1.75 W
Colour	White
Local Signalling	1 LED green/red for STAT 1 LED green/red for Sercos III 1 LED green for Sercos III port 1 1 LED green for Sercos III port 2
Net Weight	0.03 kg

Environment

Resistance To Electrostatic Discharge	4 kV on contact conforming to IEC 61000-4-2 8 kV in air conforming to IEC 61000-4-2
Resistance To Electromagnetic Fields	1 V/m 2...2.7 GHz conforming to IEC 61000-4-3 10 V/m 80 MHz...2 GHz conforming to IEC 61000-4-3
Resistance To Fast Transients	1 kV (I/O) conforming to IEC 61000-4-4 1 kV (shielded cable) conforming to IEC 61000-4-4 2 kV (power lines) conforming to IEC 61000-4-4
Surge Withstand	0.5 kV differential mode conforming to IEC 61000-4-5 1 kV common mode conforming to IEC 61000-4-5
Electromagnetic Compatibility	EN/IEC 61000-4-6
Disturbance Radiated/Conducted	CISPR 11

Packing Units

Unit Type Of Package 1	PCE
Number Of Units In Package 1	1

Disclaimer: This documentation is not intended as a substitute for and is not to be used for determining suitability or reliability of these products for specific user applications

Package 1 Height	3.000 cm
Package 1 Width	6.000 cm
Package 1 Length	10.500 cm
Package 1 Weight	72.000 g
Unit Type Of Package 2	S02
Number Of Units In Package 2	50
Package 2 Height	15.000 cm
Package 2 Width	30.000 cm
Package 2 Length	40.000 cm
Package 2 Weight	3.852 kg

Contractual warranty

Warranty	18 months

Sustainability

Green Premium™ label is Schneider Electric's commitment to delivering products with best-in-class environmental performance. Green Premium promises compliance with the latest regulations, transparency on environmental impacts, as well as circular and low-CO_2 products.

Guide to assessing product sustainability is a white paper that clarifies global eco-label standards and how to interpret environmental declarations.

Learn more about Green Premium >

Guide to assess a product's sustainability >

Transparency RoHS/REACh

Well-being performance

Toxic Heavy Metal Free	
Mercury Free	
Rohs Exemption Information	Yes
Pvc Free	

Certifications & Standards

Reach Regulation	REACh Declaration
Eu Rohs Directive	Pro-active compliance (Product out of EU RoHS legal scope)
China Rohs Regulation	China RoHS declaration
Environmental Disclosure	Product Environmental Profile
Weee	The product must be disposed on European Union markets following specific waste collection and never end up in rubbish bins
Circularity Profile	End of Life Information

Presentation

Presentation

Sercos fieldbus interface module

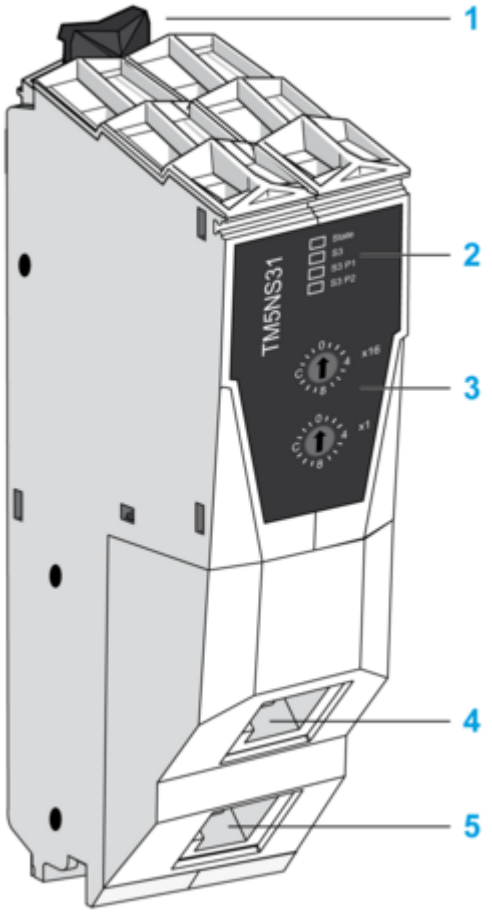

1 Locking clip
2 Status LEDs
3 Sercos III address setting rotary switches
4 Sercos III Port 1 connector (RJ45)
5 Sercos III Port 2 connector (RJ45)

Dimensions Drawings

Dimensions and Schema

Sercos Fieldbus Interface Module

Dimensions

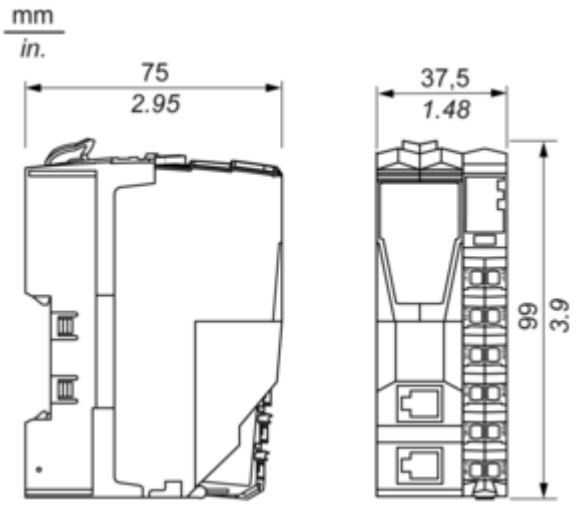

Mounting and Clearance

TM5 System

Spacing Requirements

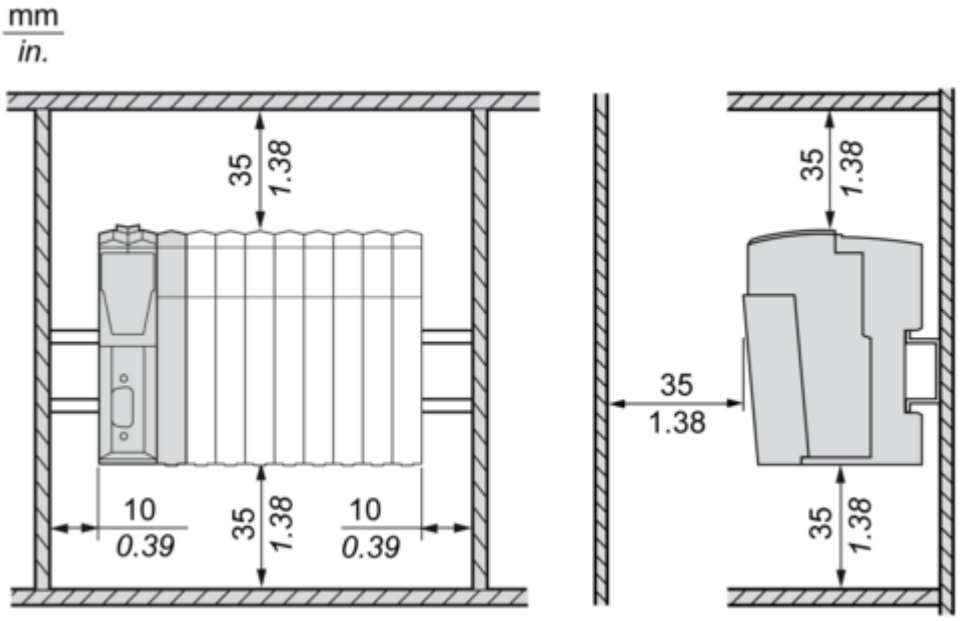

Mounting Position

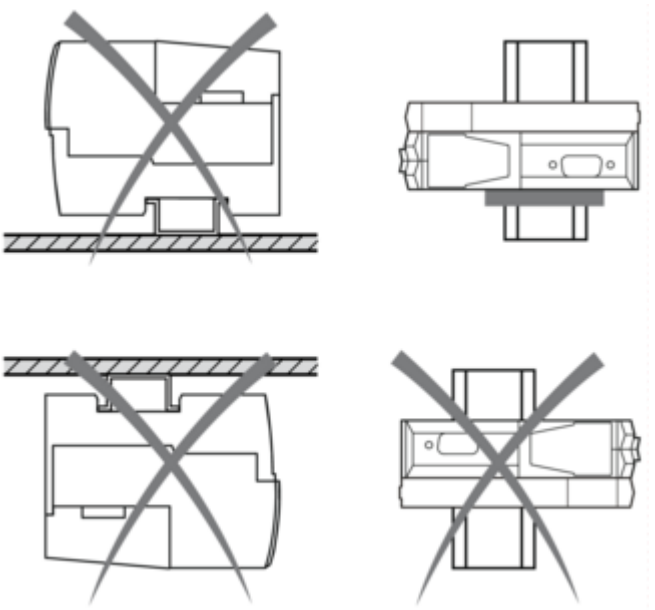

Mounting on a Din Rail

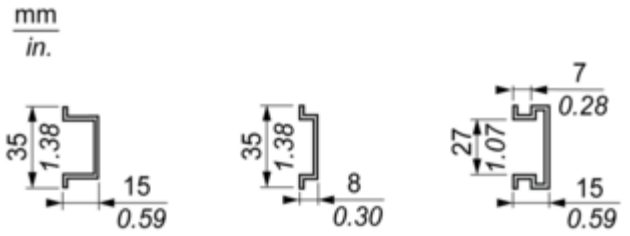
mm
in.
35
1.38
15
0.59
35
1.38
8
0.30
7
0.28
27
1.07
15
0.59

Connections and Schema

Connections and Schema

Wiring Diagram

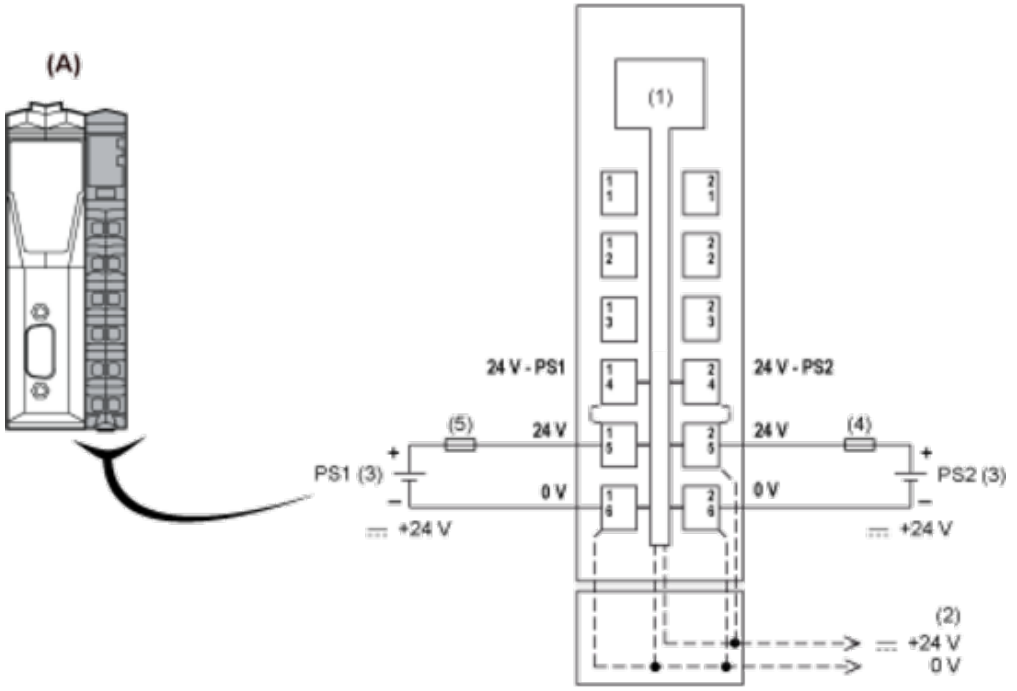

(A) Interface Power Distribution Module (IPDM)
(1) Internal electronics
(2) 24 Vdc I/O power segment integrated in the bus bases
(3) PS1/PS2: External isolated power supply 24 Vdc
(4) External fuse, Type T slow blow, 10 A max., 250 V
(5) External fuse, Type T slow blow, 1 A, 250 V