Product datasheet

Specifications

CANopen FieldBus Interface Module

TM5NCO1

EAN Code: 3595864093031

Main

Range Of Product	Modicon TM5
Product Or Component Type	CANopen communication module

Complementary

Range Compatibility	Modicon LMC058 Modicon LMC078 Modicon M258
Product Compatibility	Motion controller Logic controller
Integrated Connection Type	1 isolated serial link, male SUB-D 9 CANopen, 10, 20, 50, 125, 250, 500, 800, 1000 Kbit/s and autodetected
Current Consumption	300 mA
Device Composition	Interface module Bus base ordered separately Power supply ordered separately Terminal block ordered separately
Maximum Power Dissipation In W	1.5 W
Colour	White
Local Signalling	1 LED green/red for power supply (PWR) 1 LED green/red for CAN status (RUN) 1 LED red for CAN status (ERROR) 1 LED yellow for controller communication status on TM5 bus (TxD)
Electrical Connection	Removable spring terminal block
Marking	CE
Net Weight	0.05 kg

Environment

Standards	CSA C22.2 No 213 IEC 61131-2 UL 508 CSA C22.2 No 142
Product Certifications	cULus C-Tick CSA GOST-R
Ambient Air Temperature For Operation	-10…55 °C without derating (horizontal installation) -10…60 °C with derating factor (horizontal installation) -10…50 °C (vertical installation)
Ambient Air Temperature For Storage	-40…70 °C
Relative Humidity	5…95 % without condensation

Disclaimer: This documentation is not intended as a substitute for and is not to be used for determining suitability or reliability of these products for specific user applications

Ip Degree Of Protection	IP20 conforming to IEC 61131-2
Pollution Degree	2 conforming to IEC 60664
Operating Altitude	0...2000 m
Storage Altitude	0…3000 m
Vibration Resistance	1 gn at 8.4…150 Hz on DIN rail 3.5 mm at 5…8.4 Hz on DIN rail
Shock Resistance	15 gn for 11 ms
Resistance To Electrostatic Discharge	4 kV on contact conforming to IEC 61000-4-2 8 kV in air conforming to IEC 61000-4-2
Resistance To Electromagnetic Fields	1 V/m 2...2.7 GHz conforming to IEC 61000-4-3 10 V/m 80 MHz...2 GHz conforming to IEC 61000-4-3
Resistance To Fast Transients	1 kV (I/O) conforming to IEC 61000-4-4 1 kV (shielded cable) conforming to IEC 61000-4-4 2 kV (power lines) conforming to IEC 61000-4-4
Surge Withstand	0.5 kV differential mode conforming to IEC 61000-4-5 1 kV common mode conforming to IEC 61000-4-5
Electromagnetic Compatibility	EN/IEC 61000-4-6
Disturbance Radiated/Conducted	CISPR 11

Packing Units

Unit Type Of Package 1	PCE
Number Of Units In Package 1	1
Package 1 Height	3.200 cm
Package 1 Width	6.000 cm
Package 1 Length	10.500 cm
Package 1 Weight	64.000 g
Unit Type Of Package 2	S02
Number Of Units In Package 2	50
Package 2 Height	15.000 cm
Package 2 Width	30.000 cm
Package 2 Length	40.000 cm
Package 2 Weight	3.539 kg

Contractual warranty

Warranty	18 months

Sustainability

Green Premium™ label is Schneider Electric's commitment to delivering products with best-in-class environmental performance. Green Premium promises compliance with the latest regulations, transparency on environmental impacts, as well as circular and low-CO_2 products.

Guide to assessing product sustainability is a white paper that clarifies global eco-label standards and how to interpret environmental declarations.

Learn more about Green Premium >

Guide to assess a product's sustainability >

Transparency RoHS/REACh

Well-being performance

Reach Free Of Svhc	
Toxic Heavy Metal Free	
Mercury Free	
Rohs Exemption Information	Yes
Pvc Free	

Certifications & Standards

Reach Regulation	REACh Declaration
Eu Rohs Directive	Pro-active compliance (Product out of EU RoHS legal scope) EU RoHS Declaration
China Rohs Regulation	China RoHS declaration
Environmental Disclosure	Product Environmental Profile
Weee	The product must be disposed on European Union markets following specific waste collection and never end up in rubbish bins
Circularity Profile	End of Life Information

Presentation

CANopen Interface Module

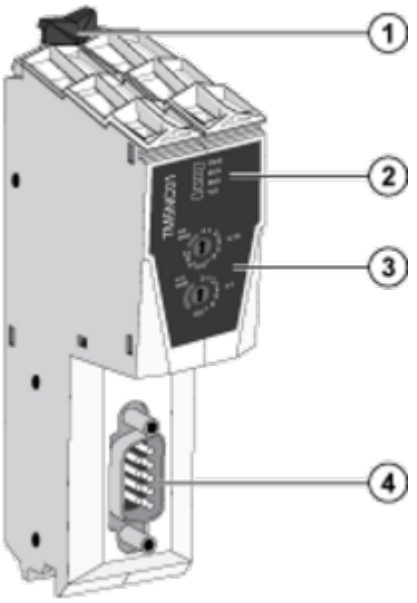

(1) Locking clip
(2) Status LEDs
(3) CANopen address and bit-rate setting rotary switches
(4) CANopen bus connector (SUB-D 9)

Dimensions Drawings

TM5 Field Bus Interface

Dimensions

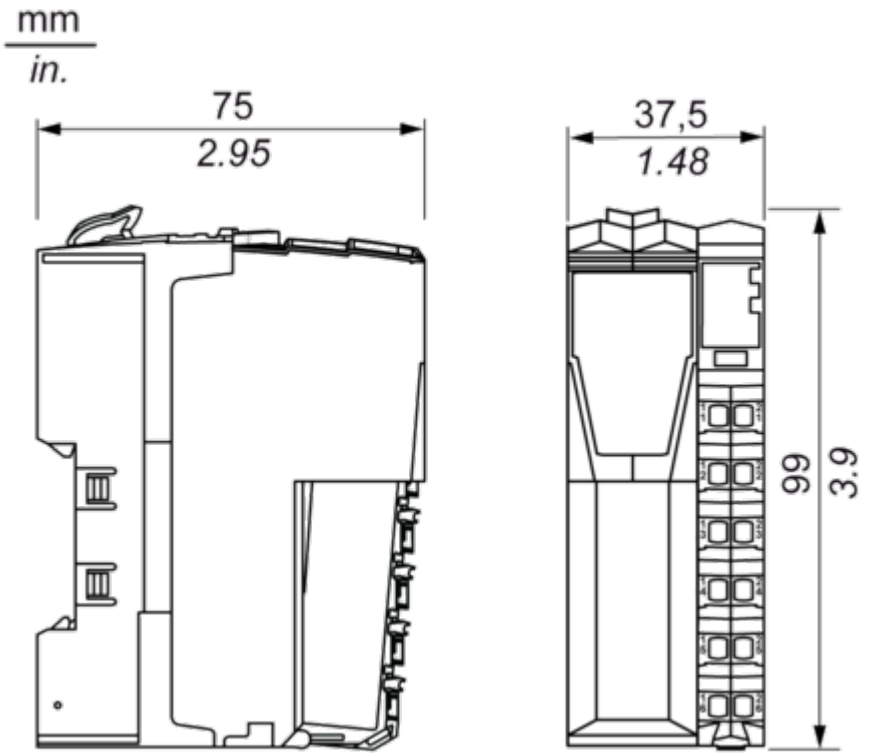

Mounting and Clearance

TM5 System

Spacing Requirements

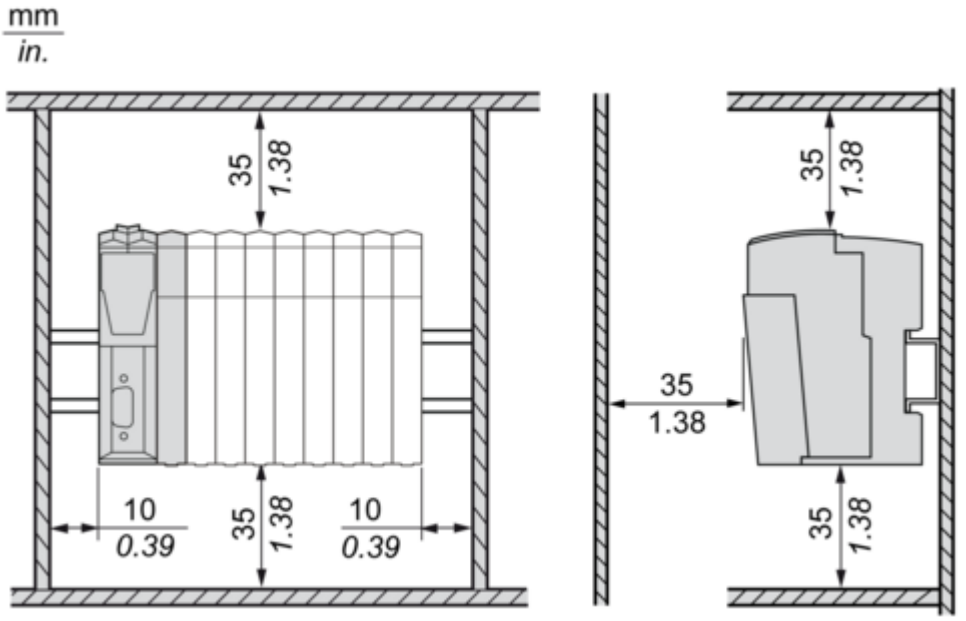

Mounting Position

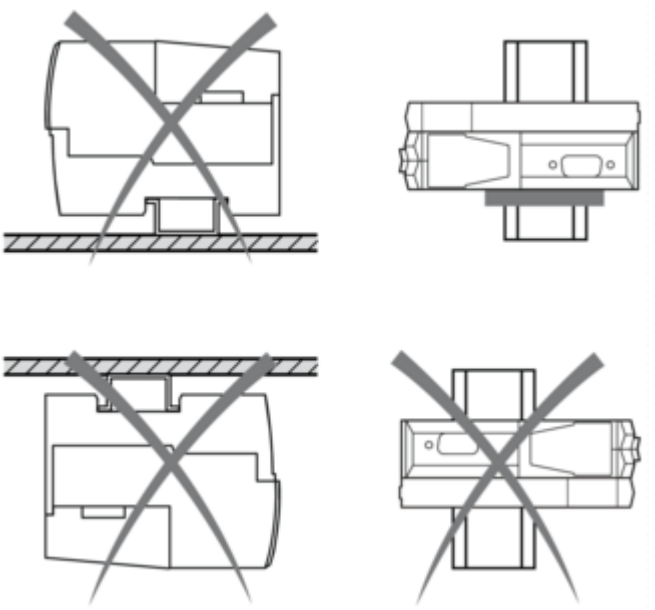

Mounting on a Din Rail

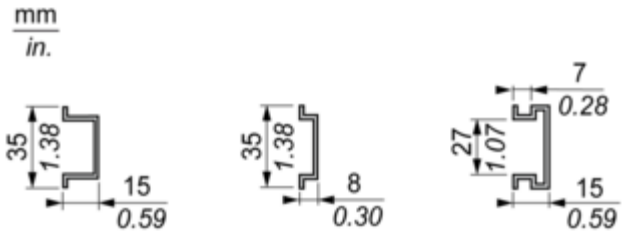
mm
in.
35
1.38
15
0.59
35
1.38
8
0.30
7
0.28
27
1.07
15
0.59

Connections and Schema

TM5 System Wiring Recommendations

Wire Sizes to Use with the Removable Spring Terminal Blocks

mm / in. 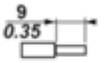				
mm²	0,08…2,5	0,25…2,5	0,25…1,5	2 x 0,25...2 x 0,75
AWG	28…14	24…14	24…16	2 x 24…2 x 18