Product datasheet

Specifications

Green Premium™

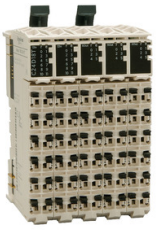

compact I/O expansion block TM5 - 20 I/O - 12 DI - 8 DO transistor

TM5C12D8T

EAN Code: 3595864074368

Main

Range Of Product	Modicon TM5
Product Or Component Type	Compact I/O expansion block

Complementary

Enclosure Material	Plastic
Colour	White
Input/Output Number	20
For Enclosure Nominal Dimensions	12 I + 8 O
Number Of Modules	Digital input: 3 module(s) x 4 Digital output: 2 module(s) x 4
Discrete Input Number	12
Discrete Input Voltage	24 V
Discrete Input Voltage Type	DC
Input Voltage Limits	20.4...28.8 V
Discrete Input Logic	Sink
Discrete Input Current	3.75 mA
Input Impedance	6.4 kOhm
Analogue Input Number	0
Discrete Output Number	8
Discrete Output Type	Transistor
Wiring Mode	3-wire for discrete input 3-wire for discrete output
Output Voltage	24 V DC
Output Voltage Limits	20.4...28.8 V DC
Discrete Output Logic	Source
Discrete Output Current	0.5 A per output
Peak Output Current	4 A
Voltage State 0 Guaranteed	<= 5 V
Voltage State 1 Guaranteed	>= 15 V
Input Filtering	<= 100 ms hardware <= 25 ms configurable by software
Response Time	<= 300 µs from state 0 to state 1 for output <= 300 µs from state 1 to state 0 for output

Disclaimer: This documentation is not intended as a substitute for and is not to be used for determining suitability or reliability of these products for specific user applications

Maximum Leakage Current	5 µA (when switched off) for output
Isolation	500 Vrms AC insulation between channel and bus No insulation between channels
Maximum Voltage Drop	<0.3 V at 500 mA for output
Current Consumption	68 mA at 5 V DC bus 80 mA at 24 V DC input/output
Max Current	1000 mA sensor supply 1500 mA actuator supply 4000 mA loads on I/O power segment
Maximum Power Dissipation In W	2.36 W
Local Signalling	5 LEDs (green) for power supply 5 LEDs (red) for power supply 12 LEDs (green) for input status 8 LEDs (yellow) for output status
Sensor Power Supply	24 V, 500 mA for all channels with overload, short-circuit and reverse polarity protection
Electrical Connection	Removable spring terminal block
Marking	CE
Surge Withstand	0.5 kV differential mode 24 V DC conforming to IEC 61000-4-5 1 kV common mode 24 V DC conforming to IEC 61000-4-5
Electromagnetic Compatibility	EN/IEC 61000-4-6
Disturbance Radiated/Conducted	CISPR 11

Environment

Standards	IEC 61131-2 UL 508 CSA C22.2 No 213 CSA C22.2 No 142
Product Certifications	C-Tick GOST-R CSA cULus
Ambient Air Temperature For Operation	-10…50 °C (vertical installation) -10…60 °C (horizontal installation)
Ambient Air Temperature For Storage	-40…70 °C
Relative Humidity	5…95 % without condensation
Ip Degree Of Protection	IP20 conforming to IEC 61131-2
Pollution Degree	2 conforming to IEC 60664
Operating Altitude	0...2000 m
Storage Altitude	0…3000 m
Vibration Resistance	1 gn at 8.4…150 Hz on DIN rail 3.5 mm at 5…8.4 Hz on DIN rail
Shock Resistance	15 gn for 11 ms
Resistance To Electrostatic Discharge	4 kV on contact conforming to IEC 61000-4-2 8 kV in air conforming to IEC 61000-4-2
Resistance To Electromagnetic Fields	1 V/m 2...2.7 GHz conforming to IEC 61000-4-3 10 V/m 80...2000 MHz conforming to IEC 61000-4-3
Resistance To Fast Transients	1 kV (I/O) conforming to IEC 61000-4-4 1 kV (shielded cable) conforming to IEC 61000-4-4 2 kV (power lines) conforming to IEC 61000-4-4
Mounting Support	DIN rail

Net Weight	0.24 kg

Packing Units

Unit Type Of Package 1	PCE
Number Of Units In Package 1	1
Package 1 Height	7.000 cm
Package 1 Width	9.100 cm
Package 1 Length	11.000 cm
Package 1 Weight	273.000 g
Unit Type Of Package 2	S03
Number Of Units In Package 2	36
Package 2 Height	30.000 cm
Package 2 Width	30.000 cm
Package 2 Length	40.000 cm
Package 2 Weight	10.171 kg

Contractual warranty

Warranty	18 months

Sustainability

Green Premium™ label is Schneider Electric's commitment to delivering products with best-in-class environmental performance. Green Premium promises compliance with the latest regulations, transparency on environmental impacts, as well as circular and low-CO_2 products.

Guide to assessing product sustainability is a white paper that clarifies global eco-label standards and how to interpret environmental declarations.

Learn more about Green Premium >

Guide to assess a product's sustainability >

Transparency RoHS/REACh

Well-being performance

Reach Free Of Svhc	
Toxic Heavy Metal Free	
Mercury Free	
Rohs Exemption Information	Yes
Pvc Free	

Certifications & Standards

Reach Regulation	REACh Declaration
Eu Rohs Directive	Pro-active compliance (Product out of EU RoHS legal scope) EU RoHS Declaration
China Rohs Regulation	China RoHS declaration
Environmental Disclosure	Product Environmental Profile
Weee	The product must be disposed on European Union markets following specific waste collection and never end up in rubbish bins
Circularity Profile	End of Life Information

Presentation

TM5 Compact I/O Module

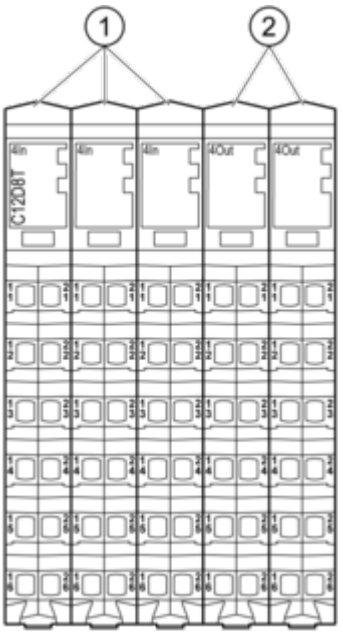

N°	Designation
1	Input electronic module / 4 digital inputs
2	Output electronic module / 4 digital outputs

Dimensions Drawings

Compact I/O Module

Dimensions

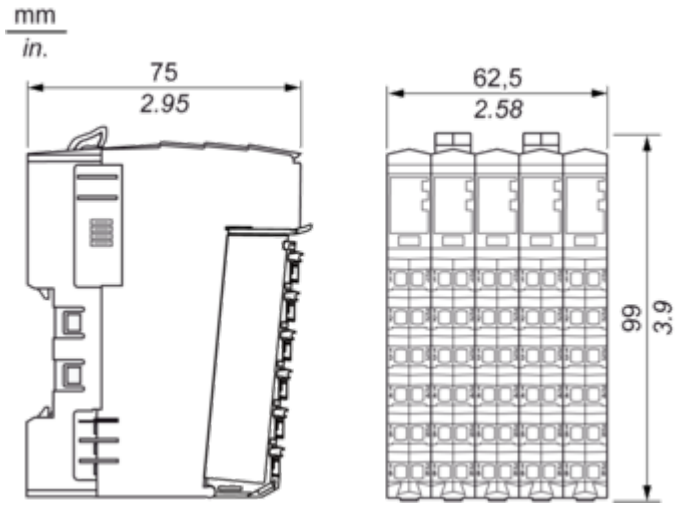

Mounting and Clearance

TM5 System

Spacing Requirements

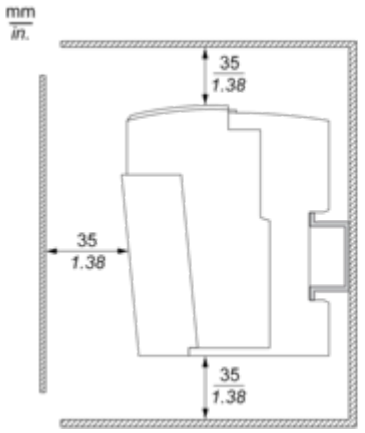

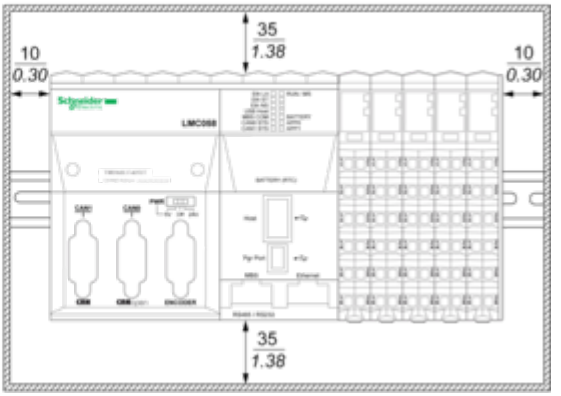

Mounting on a DIN Rail

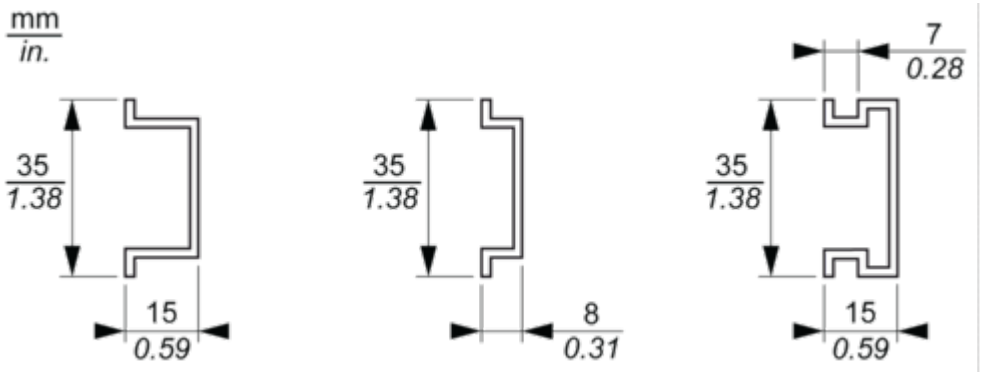

Connections and Schema

TM5 System Wiring Recommendations

Wire Sizes to Use with the Removable Spring Terminal Blocks

mm / in. 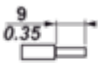				
mm²	0,08…2,5	0,25…2,5	0,25…1,5	2 x 0,25...2 x 0,75
AWG	28…14	24…14	24…16	2 x 24…2 x 18

Digital Input 4In

Wiring Diagram

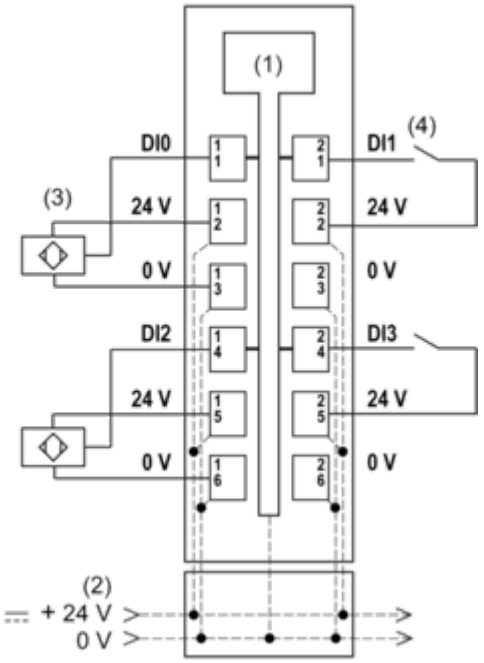

1 Internal electronics
2 24 Vdc I/O power segment integrated into the bus bases
3 3-wire sensor
4 2-wire sensor

Digital Output 4Out

Wiring Diagram

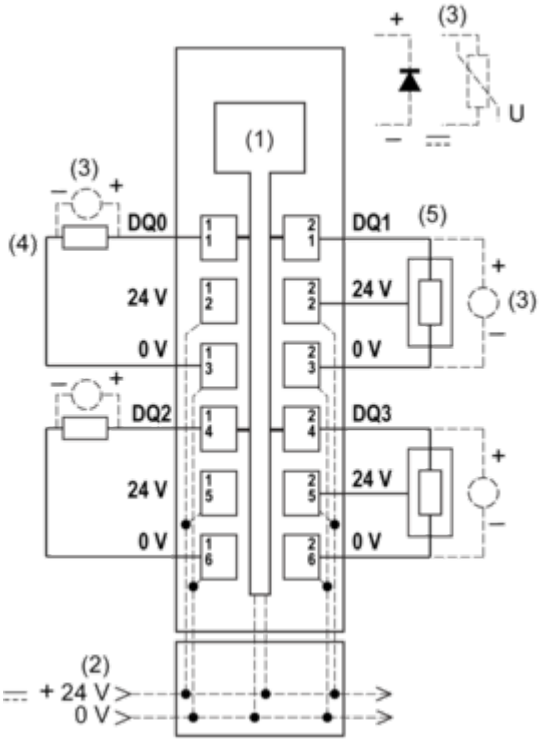

1 Internal electronics
2 24 Vdc I/O power segment integrated into the bus bases
3 Inductive load protection
4 2-wire load
5 3-wire load

Performance Curves

Switching Inductive Load Characteristics

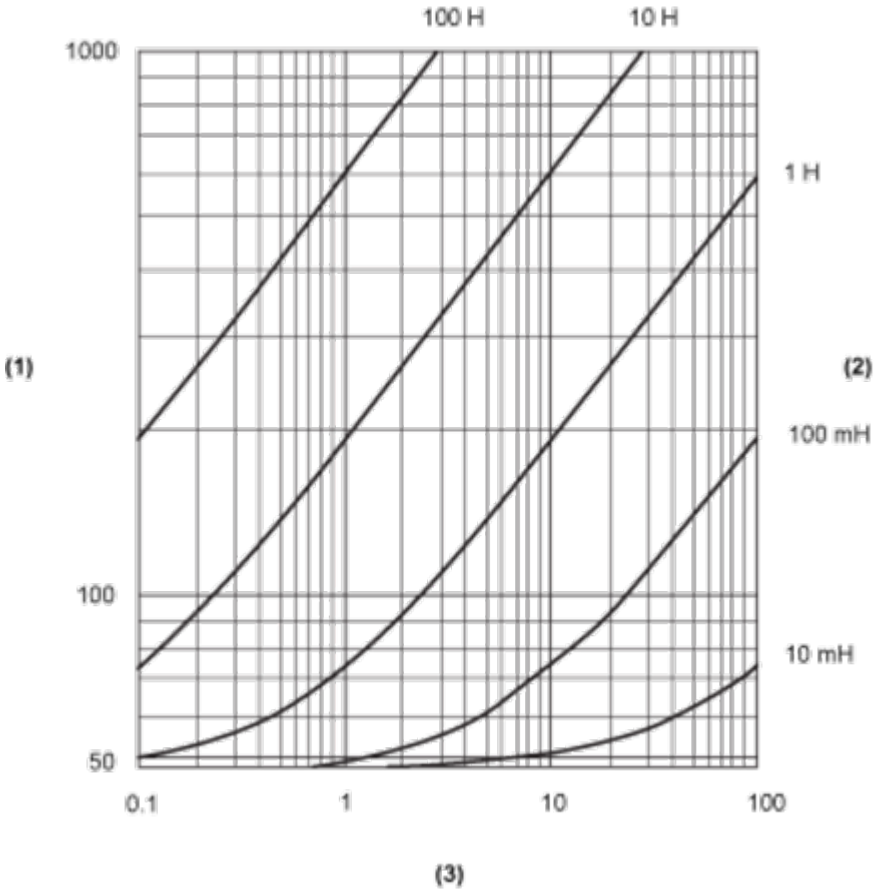

(1) Load resistance in Ω
(2) Load inductance in H
(3) Max. operating cycles / second