Product datasheet

Specifications

controller M221 16 IO relay Ethernet spring

TM221ME16RG

EAN Code: 3606480611285

Main

Range Of Product	Modicon M221
Product Or Component Type	Logic controller
[Us] Rated Supply Voltage	24 V DC
Discrete Input Number	8, discrete input conforming to IEC 61131-2 Type 1
Analogue Input Number	2 at 0...10 V
Discrete Output Type	Relay normally open
Discrete Output Number	8 relay
Discrete Output Voltage	5...125 V DC 5...250 V AC
Discrete Output Current	2 A

Complementary

Discrete I/O Number	16
Maximum Number Of I/O Expansion Module	7 (local I/O-Architecture) 14 (remote I/O-Architecture)
Supply Voltage Limits	20.4…28.8 V
Inrush Current	35 A
Maximum Power Consumption In W	23.3 W at 24 V (with max number of I/O expansion module) 4.3 W at 24 V (without I/O expansion module)
Power Supply Output Current	0.52 A 5 V for expansion bus 0.46 A 24 V for expansion bus
Discrete Input Logic	Sink or source (positive/negative)
Discrete Input Voltage	24 V
Discrete Input Voltage Type	DC
Analogue Input Resolution	10 bits
Lsb Value	10 mV
Conversion Time	1 ms per channel + 1 controller cycle time for analogue input analog input
Permitted Overload On Inputs	+/- 30 V DC for 5 min (maximum) for analog input +/- 13 V DC (permanent) for analog input
Voltage State 1 Guaranteed	>= 15 V for input
Voltage State 0 Guaranteed	<= 5 V for input
Discrete Input Current	7 mA for discrete input 5 mA for fast input

Disclaimer: This documentation is not intended as a substitute for and is not to be used for determining suitability or reliability of these products for specific user applications

Input Impedance	100 kOhm for analog input 3.4 kOhm for input 4.9 kOhm for fast input
Response Time	35 µs turn-off, I2...I5 terminal(s) for input 5 µs turn-on, I0, I1, I6, I7 terminal(s) for fast input 35 µs turn-on, other terminals terminal(s) for input 5 µs turn-off, I0, I1, I6, I7 terminal(s) for fast input 100 µs turn-off, other terminals terminal(s) for input 5 µs turn-on, turn-off, Q0...Q1 terminal(s) for output 50 µs turn-on, turn-off, Q2...Q3 terminal(s) for output 300 µs turn-on, turn-off, other terminals terminal(s) for output
Configurable Filtering Time	0 ms for input 3 ms for input 12 ms for input
Output Voltage Limits	125 V DC 277 V AC
Maximum Current Per Output Common	7 A
Absolute Accuracy Error	+/- 1 % of full scale for analog input
Electrical Durability	100000 cycles AC-12, 120 V, 240 VA, resistive 100000 cycles AC-12, 240 V, 480 VA, resistive 300000 cycles AC-12, 120 V, 80 VA, resistive 300000 cycles AC-12, 240 V, 160 VA, resistive 100000 cycles AC-15, cos phi = 0.35, 120 V, 60 VA, inductive 100000 cycles AC-15, cos phi = 0.35, 240 V, 120 VA, inductive 300000 cycles AC-15, cos phi = 0.35, 120 V, 18 VA, inductive 300000 cycles AC-15, cos phi = 0.35, 240 V, 36 VA, inductive 100000 cycles AC-14, cos phi = 0.7, 120 V, 120 VA, inductive 100000 cycles AC-14, cos phi = 0.7, 240 V, 240 VA, inductive 300000 cycles AC-14, cos phi = 0.7, 120 V, 36 VA, inductive 300000 cycles AC-14, cos phi = 0.7, 240 V, 72 VA, inductive 100000 cycles DC-12, 24 V, 48 W, resistive 300000 cycles DC-12, 24 V, 16 W, resistive 100000 cycles DC-13, 24 V, 24 W, inductive (L/R = 7 ms) 300000 cycles DC-13, 24 V, 7.2 W, inductive (L/R = 7 ms)
Switching Frequency	20 switching operations/minute with maximum load
Mechanical Durability	20000000 cycles for relay output
Minimum Load	1 mA at 5 V DC for relay output
Protection Type	Without protection at 5 A
Reset Time	1 s
Memory Capacity	256 kB for user application and data RAM with 10000 instructions 256 kB for internal variables RAM
Data Backed Up	256 kB built-in flash memory for backup of application and data
Data Storage Equipment	2 GB SD card (optional)
Battery Type	BR2032 or CR2032X lithium non-rechargeable
Backup Time	1 year at 25 °C (by interruption of power supply)
Execution Time For 1 Kinstruction	0.3 ms for event and periodic task 0.7 ms for other instruction
Execution Time Per Instruction	0.2 µs Boolean
Exct Time For Event Task	60 µs response time
Application Structure	8 interrupt tasks 1 cyclic auxiliary task 1 configurable freewheeling/cyclic master task
Maximum Size Of Object Areas	512 %KW constant words 8000 %MW memory words 255 %TM timers 255 %C counters 512 %M memory bits
Realtime Clock	With

Clock Drift	<= 30 s/month at 25 °C
Regulation Loop	Adjustable PID regulator up to 14 simultaneous loops
Function Available	Frequency generator PWM PLS
Counting Input Number	4 fast input (HSC mode) at 100 kHz 32 bits
Counter Function	Pulse/direction Single phase A/B
Integrated Connection Type	USB port with mini B USB 2.0 connector Non isolated serial link serial 1 with RJ45 connector and RS232/RS485 interface Ethernet with RJ45 connector
Supply	(serial 1)serial link supply: 5 V, <200 mA
Transmission Rate	1.2...115.2 kbit/s (115.2 kbit/s by default) for bus length of 15 m for RS485 1.2...115.2 kbit/s (115.2 kbit/s by default) for bus length of 3 m for RS232 480 Mbit/s for USB
Communication Port Protocol	USB port: USB - SoMachine-Network Non isolated serial link: Modbus master/slave - RTU/ASCII or SoMachine-Network Ethernet
Port Ethernet	10BASE-T/100BASE-TX 1 port with 100 m copper cable
Communication Service	Ethernet/IP adapter Modbus TCP client DHCP client Modbus TCP server Modbus TCP slave device
Local Signalling	1 LED (green) for PWR 1 LED (green) for RUN 1 LED (red) for module error (ERR) 1 LED (green) for SD card access (SD) 1 LED (red) for BAT 1 LED per channel (green) for I/O state 1 LED (green) for SL Ethernet network activity (green) for ACT Ethernet network link (yellow) for Link (Link Status)
Electrical Connection	terminal block, 3 terminal(s) for connecting the 24 V DC power supply connector, 4 terminal(s) for analogue inputs Mini B USB 2.0 connector for a programming terminal removable spring terminal block, 10 terminal(s) for inputs removable spring terminal block, 11 terminal(s) for outputs
Maximum Cable Distance Between Devices	Shielded cable: <10 m for fast input Unshielded cable: <30 m for output Unshielded cable: <30 m for digital input Unshielded cable: <1 m for analog input Shielded cable: <3 m for fast output
Insulation	Between input and internal logic at 500 V AC Between fast input and internal logic at 500 V AC Non-insulated between inputs Between output and internal logic at 500 V AC Between output groups at 500 V AC Non-insulated between analogue input and internal logic Non-insulated between analogue inputs
Marking	CE
Mounting Support	Top hat type TH35-15 rail conforming to IEC 60715 Top hat type TH35-7.5 rail conforming to IEC 60715 plate or panel with fixing kit
Height	90 mm
Depth	70 mm
Width	70 mm
Net Weight	0.264 kg

Environment

Standards	IEC 61131-2 UL 508 CAN/CSA C22.2 No. 213 IACS E10 ANSI/ISA 12-12-01
Product Certifications	ABS RCM EAC DNV-GL LR cULus CE UKCA cULus HazLoc
Environmental Characteristic	Ordinary and hazardous location
Resistance To Electrostatic Discharge	8 kV in air conforming to IEC 61000-4-2 4 kV on contact conforming to IEC 61000-4-2
Resistance To Electromagnetic Fields	10 V/m 80 MHz...1 GHz conforming to IEC 61000-4-3 3 V/m 1.4 GHz...2 GHz conforming to IEC 61000-4-3 1 V/m 2...2.7 GHz conforming to IEC 61000-4-3
Resistance To Magnetic Fields	30 A/m 50/60 Hz conforming to IEC 61000-4-8
Resistance To Fast Transients	2 kV (power lines) conforming to IEC 61000-4-4 2 kV (relay output) conforming to IEC 61000-4-4 1 kV (I/O) conforming to IEC 61000-4-4 1 kV (Ethernet line) conforming to IEC 61000-4-4 1 kV (serial link) conforming to IEC 61000-4-4
Surge Withstand	2 kV power lines (AC) common mode conforming to IEC 61000-4-5 2 kV relay output common mode conforming to IEC 61000-4-5 1 kV I/O common mode conforming to IEC 61000-4-5 1 kV shielded cable common mode conforming to IEC 61000-4-5 0.5 kV power lines (DC) differential mode conforming to IEC 61000-4-5 1 kV power lines (AC) differential mode conforming to IEC 61000-4-5 1 kV relay output differential mode conforming to IEC 61000-4-5 0.5 kV power lines (DC) common mode conforming to IEC 61000-4-5
Resistance To Conducted Disturbances	10 V 0.15...80 MHz conforming to IEC 61000-4-6 3 V 0.1...80 MHz conforming to Marine specification (LR, ABS, DNV, GL) 10 V spot frequency (2, 3, 4, 6.2, 8.2, 12.6, 16.5, 18.8, 22, 25 MHz) conforming to Marine specification (LR, ABS, DNV, GL)
Electromagnetic Emission	Conducted emissions - test level: 79 dBµV/m QP/66 dBµV/m AV (power lines (AC)) at 0.15…0.5 MHz conforming to IEC 55011 Conducted emissions - test level: 73 dBµV/m QP/60 dBµV/m AV (power lines (AC)) at 0.5…300 MHz conforming to IEC 55011 Conducted emissions - test level: 120...69 dBµV/m QP (power lines) at 10…150 kHz conforming to IEC 55011 Conducted emissions - test level: 63 dBµV/m QP (power lines) at 1.5…30 MHz conforming to IEC 55011 Radiated emissions - test level: 40 dBµV/m QP class A (10 m) at 30…230 MHz conforming to IEC 55011 Conducted emissions - test level: 79...63 dBµV/m QP (power lines) at 150…1500 kHz conforming to IEC 55011 Radiated emissions - test level: 47 dBµV/m QP class A (10 m) at 200…1000 MHz conforming to IEC 55011
Immunity To Microbreaks	10 ms
Ambient Air Temperature For Operation	-10…55 °C (horizontal installation) -10…35 °C (vertical installation)
Ambient Air Temperature For Storage	-25…70 °C
Relative Humidity	10…95 %, without condensation (in operation) 10…95 %, without condensation (in storage)
Ip Degree Of Protection	IP20 with protective cover in place
Pollution Degree	<= 2
Operating Altitude	0...2000 m

Storage Altitude	0…3000 m
Vibration Resistance	3.5 mm at 5…8.4 Hz on symmetrical rail 3.5 mm at 5…8.4 Hz on panel mounting 1 gn at 8.4…150 Hz on symmetrical rail 1 gn at 8.4…150 Hz on panel mounting
Shock Resistance	98 m/s² for 11 ms

Packing Units

Unit Type Of Package 1	PCE
Number Of Units In Package 1	1
Package 1 Height	10.7 cm
Package 1 Width	12.7 cm
Package 1 Length	9.8 cm
Package 1 Weight	440.0 g
Unit Type Of Package 2	S04
Number Of Units In Package 2	24
Package 2 Height	30 cm
Package 2 Width	40 cm
Package 2 Length	60 cm
Package 2 Weight	11.182 kg
Unit Type Of Package 3	P12
Number Of Units In Package 3	288
Package 3 Height	105.0 cm
Package 3 Width	120.0 cm
Package 3 Length	80.0 cm
Package 3 Weight	147 kg

Contractual warranty

Warranty	18 months

Sustainability

Green Premium™ label is Schneider Electric's commitment to delivering products with best-in-class environmental performance. Green Premium promises compliance with the latest regulations, transparency on environmental impacts, as well as circular and low-CO_2 products.

Guide to assessing product sustainability is a white paper that clarifies global eco-label standards and how to interpret environmental declarations.

Learn more about Green Premium >

Guide to assess a product's sustainability >

Transparency RoHS/REACh

Well-being performance

Mercury Free	
Rohs Exemption Information	Yes
Pvc Free	

Certifications & Standards

Reach Regulation	REACh Declaration
Eu Rohs Directive	Pro-active compliance (Product out of EU RoHS legal scope)
China Rohs Regulation	China RoHS declaration
Environmental Disclosure	Product Environmental Profile
Weee	The product must be disposed on European Union markets following specific waste collection and never end up in rubbish bins
Circularity Profile	End of Life Information

Dimensions Drawings

Dimensions

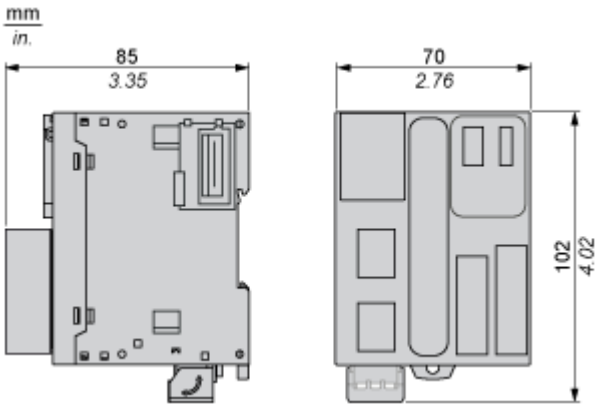

Mounting and Clearance

Mounting on a Rail

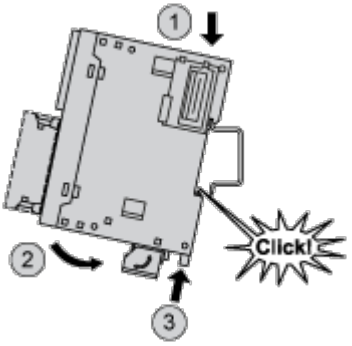

Direct Mounting on a Panel Surface

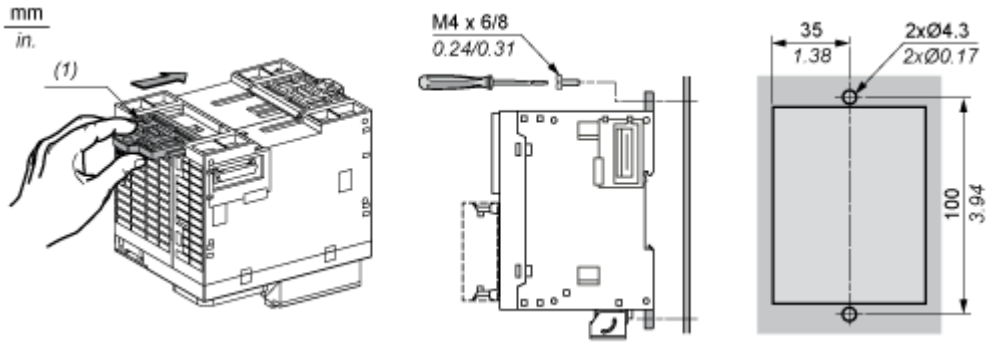

(1) Install a mounting strip

Mounting

Correct Mounting Position

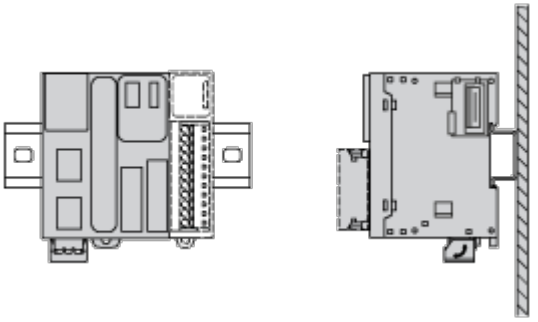

Acceptable Mounting Position

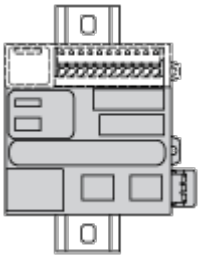

Incorrect Mounting Position

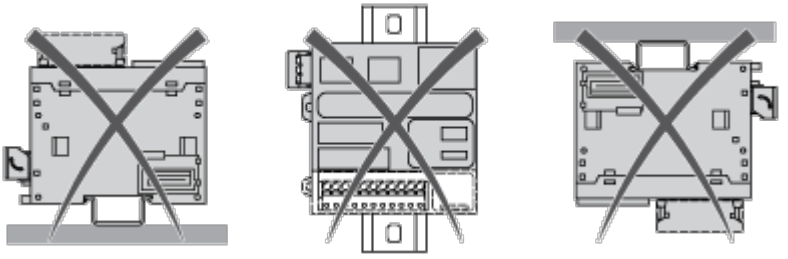

Clearance

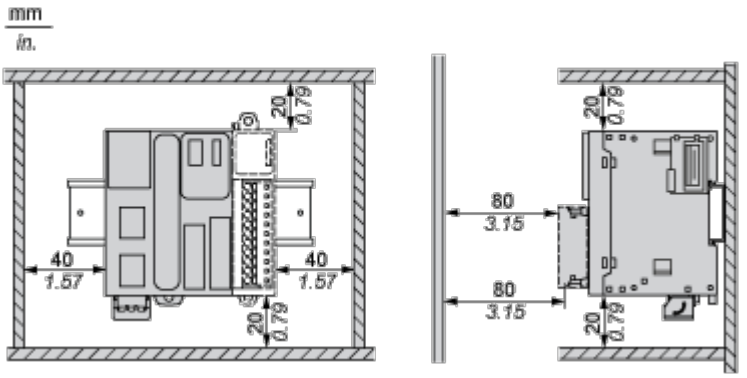

Connections and Schema

Digital Inputs

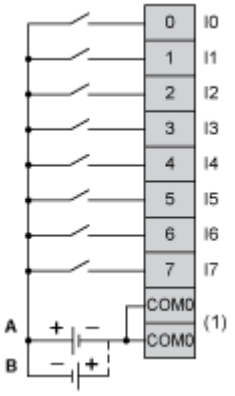

(1) The COM0 terminals are connected internally.

A : Sink wiring (positive logic).

B : Source wiring (negative logic).

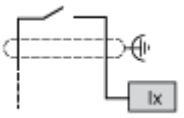

Ix I0, I1, I6, I7

Digital Outputs

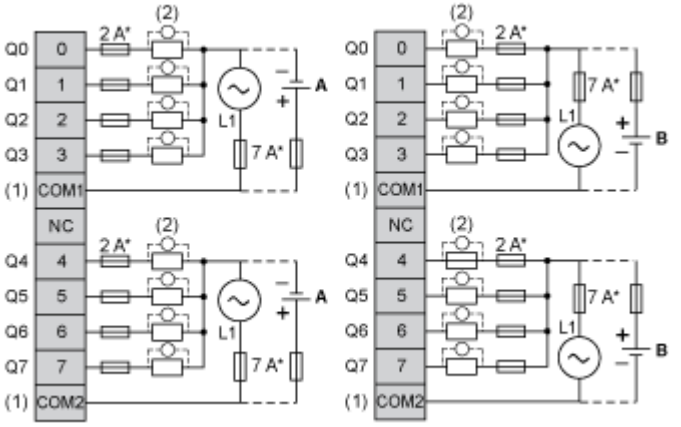

(*) Type T fuse

(1) The COM1 and COM2 terminals are not connected internally.

(2) To improve the life time of the contacts, and to protect from potential inductive load damage, you must connect a free wheeling diode in parallel to each inductive DC load or an RC snubber in parallel of each inductive AC load

A : Source wiring (negative logic).

B : Sink wiring (positive logic).

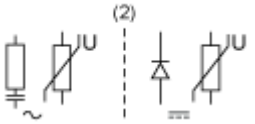

Analog Inputs

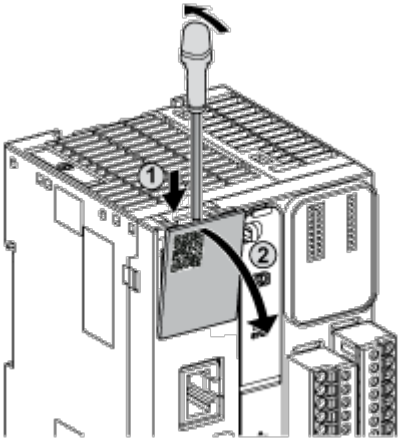

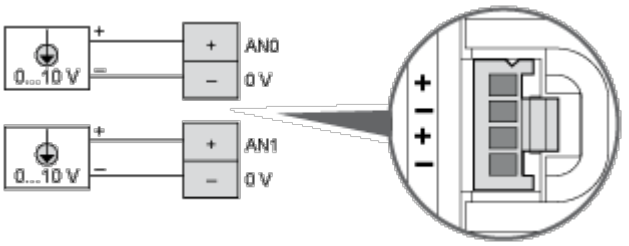

The (-) poles are connected internally.

Pin	Wire Color
AN0 / AN1	Red
0 V	Black

Ethernet Connection

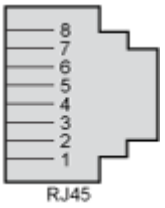

Pin N °	Signal
1	TD+
2	TD-
3	RD+
4	–
5	–
6	RD-
7	–
8	–

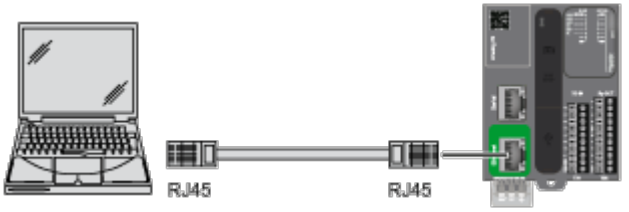

USB Mini-B Connection

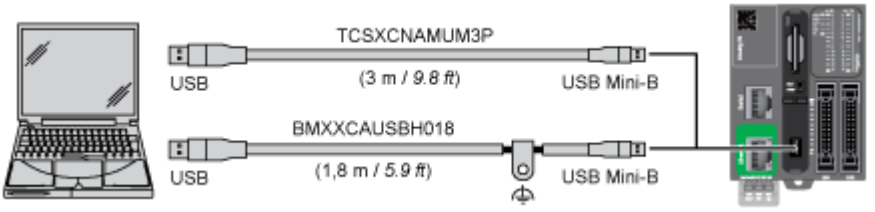

SL1 Connection

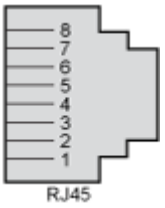

SL1

N °	RS 232	RS 485
1	RxD	N.C.
2	TxD	N.C.
3	RTS	N.C.
4	N.C.	D1
5	N.C.	D0
6	CTS	N.C.
7	N.C.*	5 Vdc
8	Common	Common
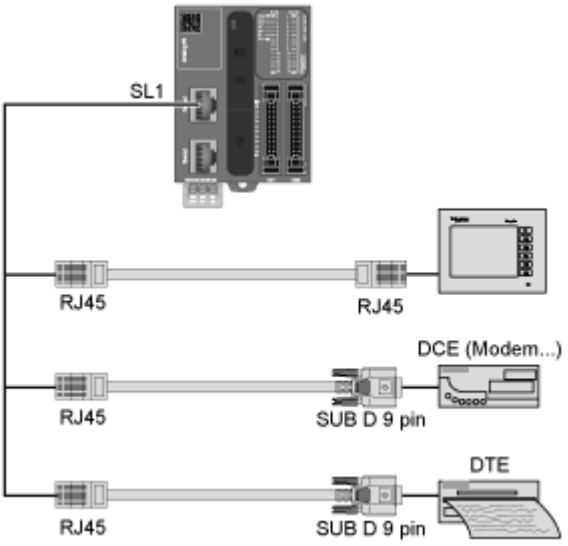
N.C.: not connected
* : 5 Vdc delivered by the controller. Do not connect.