Product datasheet

Specifications

Green Premium™

discrete I/O extension module - 10 I O - 12 V DC - for Zelio Logic

Local distributor code:

389838469 SR3XT101JD

EAN Code: 3389119203944

To be discontinued

Main

Range Of Product	Zelio Logic
Product Or Component Type	Discrete I/O extension module

Complementary

Number Or Control Scheme Lines	120 with ladder programming
Cycle Time	6…90 ms
Backup Time	10 years at 25 °C
Clock Drift	12 min/year at 0…55 °C
Checks	Program memory on each power up
[Us] Rated Supply Voltage	12 V DC
Supply Voltage Limits	10.4…14.4 V
Reverse Polarity Protection	With
Discrete Input Number	6 conforming to IEC 61131-2 Type 1
Discrete Input Type	Resistive
Discrete Input Voltage	12 V DC
Discrete Input Current	4 mA
Counting Frequency	1 kHz for discrete input
Voltage State 1 Guaranteed	>= 7 V for IB...IG used as discrete input circuit >= 5.6 V for I1...IA and IH...IR discrete input circuit
Voltage State 0 Guaranteed	<= 3 V for IB...IG used as discrete input circuit <= 2.4 V for I1...IA and IH...IR discrete input circuit
Current State 1 Guaranteed	>= 2 mA (I1...IA and IH...IR discrete input circuit) >= 0.5 mA (IB...IG used as discrete input circuit)
Current State 0 Guaranteed	<= 0.2 mA (IB...IG used as discrete input circuit) <= 0.9 mA (I1...IA and IH...IR discrete input circuit)
Input Compatibility	3-wire proximity sensors PNP for discrete input
Input Impedance	14 kOhm for IB...IG used as discrete input circuit 2.7 kOhm for I1...IA and IH...IR discrete input circuit
Number Of Outputs	4 relay
Output Voltage Limits	24...250 V AC (relay output) 5...30 V DC (relay output)
Contacts Type And Composition	NO for relay output
Output Thermal Current	8 A for all 4 outputs for relay output

Disclaimer: This documentation is not intended as a substitute for and is not to be used for determining suitability or reliability of these products for specific user applications

Electrical Durability	AC-15: 500000 cycles at 230 V, 0.9 A for relay output conforming to IEC 60947-5-1 AC-12: 500000 cycles at 230 V, 1.5 A for relay output conforming to IEC 60947-5-1 DC-13: 500000 cycles at 24 V, 0.6 A for relay output conforming to IEC 60947-5-1 DC-12: 500000 cycles at 24 V, 1.5 A for relay output conforming to IEC 60947-5-1
Switching Capacity In Ma	>= 10 mA at 12 V (relay output)
Operating Rate In Hz	0.1 Hz (at Ie) for relay output 10 Hz (no load) for relay output
Mechanical Durability	10000000 cycles for relay output
[Uimp] Rated Impulse Withstand Voltage	4 kV conforming to EN/IEC 60947-1 and EN/IEC 60664-1
Response Time	10 ms (from state 0 to state 1) for relay output 5 ms (from state 1 to state 0) for relay output
Connections - Terminals	Screw terminals, 1 x 0.25...1 x 2.5 mm² (AWG 24...AWG 14) flexible with cable end Screw terminals, 2 x 0.25...2 x 0.75 mm² (AWG 24...AWG 18) flexible with cable end Screw terminals, 1 x 0.2...1 x 2.5 mm² (AWG 25...AWG 14) semi-solid Screw terminals, 1 x 0.2...1 x 2.5 mm² (AWG 25...AWG 14) solid Screw terminals, 2 x 0.2...2 x 1.5 mm² (AWG 24...AWG 16) solid
Tightening Torque	0.5 N.m
Overvoltage Category	III conforming to IEC 60664-1
Net Weight	0.2 kg

Environment

Product Certifications	GL UL CSA C-Tick GOST
Standards	IEC 60068-2-27 Ea IEC 61000-4-5 IEC 61000-4-12 IEC 61000-4-4 level 3 IEC 61000-4-2 level 3 IEC 61000-4-3 IEC 60068-2-6 Fc IEC 61000-4-11 IEC 61000-4-6 level 3
Ip Degree Of Protection	IP20 (terminal block) conforming to IEC 60529 IP40 (front panel) conforming to IEC 60529
Environmental Characteristic	EMC directive conforming to IEC 61000-6-2 EMC directive conforming to IEC 61000-6-3 EMC directive conforming to IEC 61000-6-4 EMC directive conforming to IEC 61131-2 zone B Low voltage directive conforming to IEC 61131-2
Disturbance Radiated/Conducted	Class B conforming to EN 55022-11 group 1
Pollution Degree	2 conforming to IEC 61131-2
Ambient Air Temperature For Operation	-20…40 °C in non-ventilated enclosure conforming to IEC 60068-2-1 and IEC 60068-2-2 -20…55 °C conforming to IEC 60068-2-1 and IEC 60068-2-2
Ambient Air Temperature For Storage	-40…70 °C
Operating Altitude	2000 m
Maximum Altitude Transport	3048 m
Relative Humidity	95 % without condensation or dripping water

Packing Units

Unit Type Of Package 1	PCE
Number Of Units In Package 1	1

Package 1 Height	6.800 cm
Package 1 Width	9.000 cm
Package 1 Length	10.000 cm
Package 1 Weight	181.000 g
Unit Type Of Package 2	S03
Number Of Units In Package 2	30
Package 2 Height	30.000 cm
Package 2 Width	30.000 cm
Package 2 Length	40.000 cm
Package 2 Weight	5.911 kg

Contractual warranty

Warranty	18 months

Sustainability

Green Premium™ label is Schneider Electric's commitment to delivering products with best-in-class environmental performance. Green Premium promises compliance with the latest regulations, transparency on environmental impacts, as well as circular and low-CO_2 products.

Guide to assessing product sustainability is a white paper that clarifies global eco-label standards and how to interpret environmental declarations.

Learn more about Green Premium >

Guide to assess a product's sustainability >

Transparency RoHS/REACh

Well-being performance

Mercury Free	
Rohs Exemption Information	Yes
Pvc Free	

Certifications & Standards

Reach Regulation	REACh Declaration
Eu Rohs Directive	Pro-active compliance (Product out of EU RoHS legal scope)
China Rohs Regulation	China RoHS declaration
Environmental Disclosure	Product Environmental Profile
Weee	The product must be disposed on European Union markets following specific waste collection and never end up in rubbish bins
Circularity Profile	End of Life Information

Dimensions Drawings

I/O Extension Modules

Mounting on 35 mm/1.38 in. DIN Rail

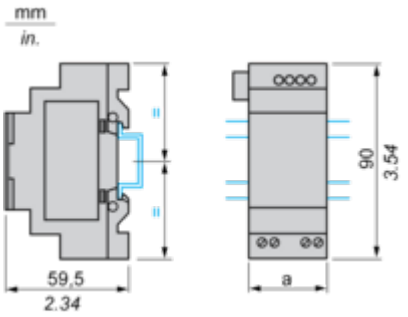

Screw Fixing (Retractable Lugs)

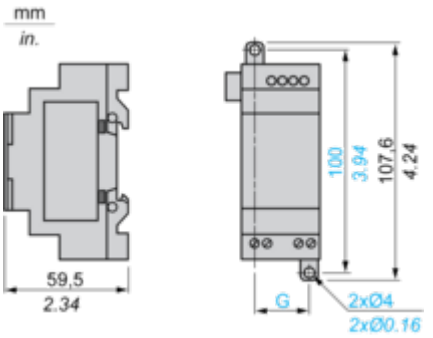

SR3	a (mm/in.)	G (mm/in.)
XT61••	35 / 1.38	25 / 0.98
XT101••	72 / 2.83	60 / 2.36
XT141••	72 / 2.83	60 / 2.36

Connections and Schema

Connection of Smart Relays on DC Supply, with Discrete I/O Extension Modules

SR3B•••JD + SR3XT•••JD, SR3B•••BD + SR3XT•••BD

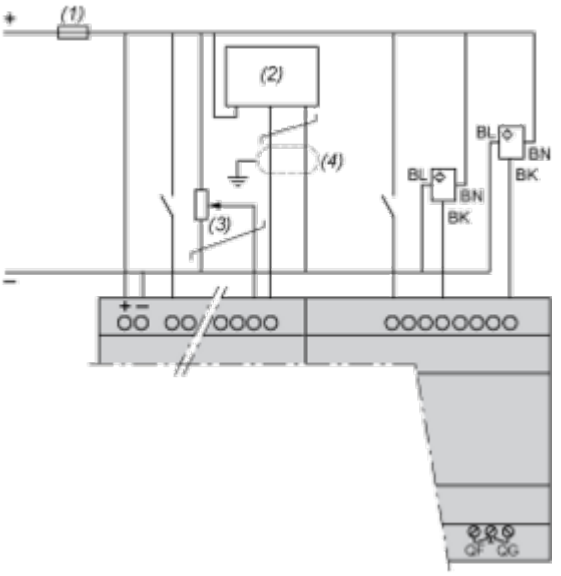

(1) 1 A quick-blow fuse or circuit-breaker.
(2) Ca: Analog sensor / Ta: Analog transmitter.
(3) Recommended values: 2.2 kΩ / 0.5 W (10 kΩ max.)
(4) Screened cables, maximum length 10 m / 32.80 feet.

NOTE: QF and QG : 5 A for SR3XT141••

Performance Curves

Compact and Modular Smart Relays

Electrical Durability of Relay Outputs

(in millions of operating cycles, conforming to IEC/EN 60947-5-1)
DC-12 (1)

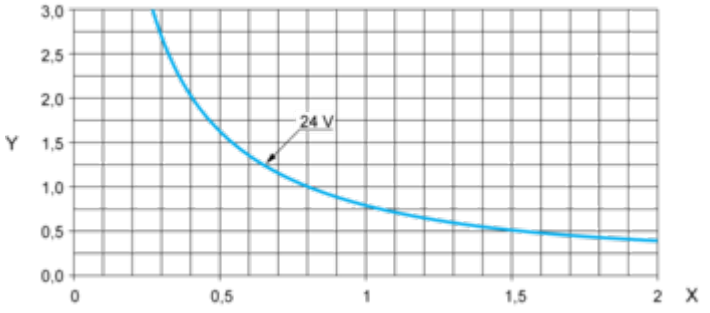

X: Current (A)
Y: Millions of operating cycles
(1) DC-12: control of resistive loads and of solid state loads isolated by opto-coupler, L/R ≤ 1 ms.

DC-13 (1)

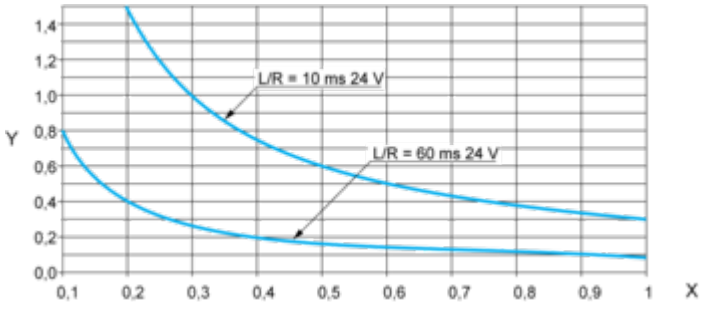

X: Current (A)
Y: Millions of operating cycles
(1) DC-13: switching electromagnets, L/R ≤ 2 x (Ue x Ie) in ms, Ue: rated operational voltage, Ie: rated operational current (with a protection diode on the load, DC-12 curves must be used with a coefficient of 0.9 applied to the number in millions of operating cycles).