Product datasheet

Specifications

Green Premium™

compact smart relay Zelio Logic - 10 I O - 100..240 V AC - no clock - display

Local distributor code:

389838197 SR2A101FU

EAN Code: 3389110547634

Main

Range Of Product	Zelio Logic
Product Or Component Type	Compact smart relay

Complementary

Local Display	With
Number Or Control Scheme Lines	0…240 with ladder programming
Cycle Time	6…90 ms
Backup Time	10 years at 25 °C
Clock Drift	12 min/year at 0…55 °C 6 s/month at 25 °C
Checks	Program memory on each power up
[Us] Rated Supply Voltage	100...240 V AC
Supply Voltage Limits	85…264 V
Supply Frequency	50/60 Hz
Maximum Supply Current	30 mA at 240 V (without extension) 80 mA at 100 V (without extension)
Power Consumption In Va	7 VA without extension
Isolation Voltage	1780 V
Protection Type	Against inversion of terminals (control instructions not executed)
Discrete Input Number	6
Discrete Input Voltage	100...240 V AC
Discrete Input Current	0.6 mA
Discrete Input Frequency	47...53 Hz 57...63 Hz
Voltage State 1 Guaranteed	>= 79 V for discrete input
Voltage State 0 Guaranteed	<= 40 V for discrete input
Current State 1 Guaranteed	>= 0.17 mA (discrete input)
Current State 0 Guaranteed	<= 0.5 mA (discrete input)
Analogue Input Number	0
Input Impedance	350 kOhm for discrete input
Number Of Outputs	4 relay
Output Voltage Limits	5...30 V DC (relay output) 24...250 V AC

Disclaimer: This documentation is not intended as a substitute for and is not to be used for determining suitability or reliability of these products for specific user applications

Contacts Type And Composition	NO for relay output
Output Thermal Current	8 A for all 4 outputs for relay output
Electrical Durability	AC-12: 500000 cycles at 230 V, 1.5 A for relay output conforming to IEC 60947-5-1 AC-15: 500000 cycles at 230 V, 0.9 A for relay output conforming to IEC 60947-5-1 DC-12: 500000 cycles at 24 V, 1.5 A for relay output conforming to IEC 60947-5-1 DC-13: 500000 cycles at 24 V, 0.6 A for relay output conforming to IEC 60947-5-1
Switching Capacity In Ma	>= 10 mA at 12 V (relay output)
Operating Rate In Hz	0.1 Hz (at Ie) for relay output 10 Hz (no load) for relay output
Mechanical Durability	10000000 cycles for relay output
[Uimp] Rated Impulse Withstand Voltage	4 kV conforming to EN/IEC 60947-1 and EN/IEC 60664-1
Clock	Without
Response Time	50 ms with ladder programming (from state 0 to state 1) for discrete input 50 ms with ladder programming (from state 1 to state 0) for discrete input 50...255 ms with FBD programming (from state 0 to state 1) for discrete input 50...255 ms with FBD programming (from state 1 to state 0) for discrete input 10 ms (from state 0 to state 1) for relay output 5 ms (from state 1 to state 0) for relay output
Connections - Terminals	Screw terminals, 1 x 0.2...1 x 2.5 mm² (AWG 25...AWG 14) semi-solid Screw terminals, 1 x 0.2...1 x 2.5 mm² (AWG 25...AWG 14) solid Screw terminals, 1 x 0.25...1 x 2.5 mm² (AWG 24...AWG 14) flexible with cable end Screw terminals, 2 x 0.2...2 x 1.5 mm² (AWG 24...AWG 16) solid Screw terminals, 2 x 0.25...2 x 0.75 mm² (AWG 24...AWG 18) flexible with cable end
Tightening Torque	0.5 N.m
Overvoltage Category	III conforming to IEC 60664-1
Net Weight	0.25 kg

Environment

Immunity To Microbreaks	10 ms
Product Certifications	C-Tick CSA GL UL GOST
Standards	IEC 61000-4-6 level 3 IEC 61000-4-11 IEC 61000-4-3 IEC 61000-4-12 IEC 61000-4-4 level 3 IEC 61000-4-5 IEC 60068-2-6 Fc IEC 61000-4-2 level 3 IEC 60068-2-27 Ea
Ip Degree Of Protection	IP20 (terminal block) conforming to IEC 60529 IP40 (front panel) conforming to IEC 60529
Environmental Characteristic	EMC directive conforming to IEC 61000-6-2 EMC directive conforming to IEC 61000-6-3 EMC directive conforming to IEC 61000-6-4 EMC directive conforming to IEC 61131-2 zone B Low voltage directive conforming to IEC 61131-2
Disturbance Radiated/Conducted	Class B conforming to EN 55022-11 group 1
Pollution Degree	2 conforming to IEC 61131-2
Ambient Air Temperature For Operation	-20…40 °C in non-ventilated enclosure conforming to IEC 60068-2-1 and IEC 60068-2-2 -20…55 °C conforming to IEC 60068-2-1 and IEC 60068-2-2
Ambient Air Temperature For Storage	-40…70 °C

Operating Altitude	2000 m
Maximum Altitude Transport	3048 m
Relative Humidity	95 % without condensation or dripping water

Packing Units

Unit Type Of Package 1	PCE
Number Of Units In Package 1	1
Package 1 Height	7.000 cm
Package 1 Width	10.000 cm
Package 1 Length	8.800 cm
Package 1 Weight	239.000 g
Unit Type Of Package 2	S03
Number Of Units In Package 2	30
Package 2 Height	30.000 cm
Package 2 Width	30.000 cm
Package 2 Length	40.000 cm
Package 2 Weight	7.782 kg

Contractual warranty

Warranty	18 months

Sustainability

Green Premium™ label is Schneider Electric's commitment to delivering products with best-in-class environmental performance. Green Premium promises compliance with the latest regulations, transparency on environmental impacts, as well as circular and low-CO_2 products.

Guide to assessing product sustainability is a white paper that clarifies global eco-label standards and how to interpret environmental declarations.

Learn more about Green Premium >

Guide to assess a product's sustainability >

Transparency RoHS/REACh

Well-being performance

Mercury Free	
Rohs Exemption Information	Yes
Pvc Free	

Certifications & Standards

Reach Regulation	REACh Declaration
Eu Rohs Directive	Pro-active compliance (Product out of EU RoHS legal scope)
China Rohs Regulation	China RoHS declaration
Environmental Disclosure	Product Environmental Profile
Weee	The product must be disposed on European Union markets following specific waste collection and never end up in rubbish bins
Circularity Profile	End of Life Information

Dimensions Drawings

Compact and Modular Smart Relays

Mounting on 35 mm/1.38 in. DIN Rail

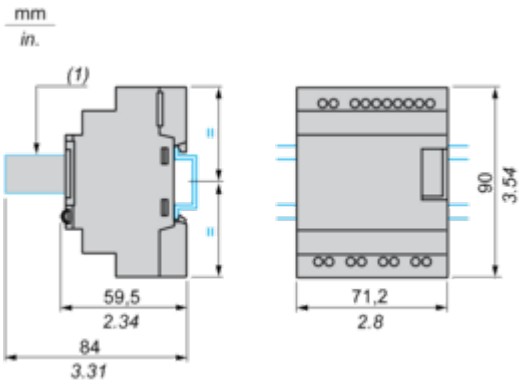

(1) With SR2USB01 or SR2BTC01

Screw Fixing (Retractable Lugs)

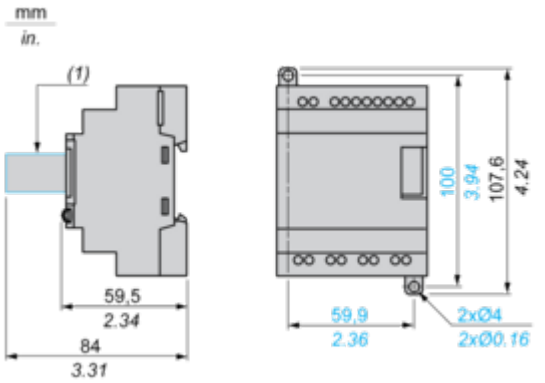

(1) With SR2USB01 or SR2BTC01

Position of Display

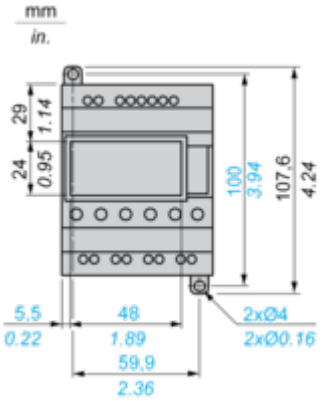

Connections and Schema

Connection of Smart Relays on AC Supply

SR••••1B, SR••••1FU

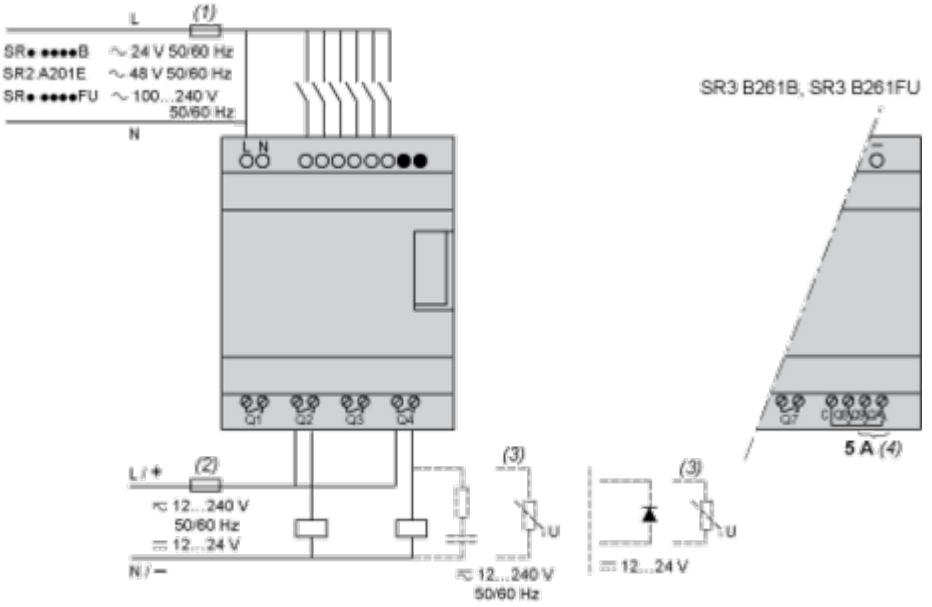

(1) 1 A quick-blow fuse or circuit-breaker.
(2) Fuse or circuit-breaker.
(3) Inductive load.
(4) Q9 and QA: 5 A (max. current in terminal C: 10 A).

With Discrete I/O Extension Module

SR3B•••B + SR3XT•••B, SR3B•••FU + SR3XT•••FU

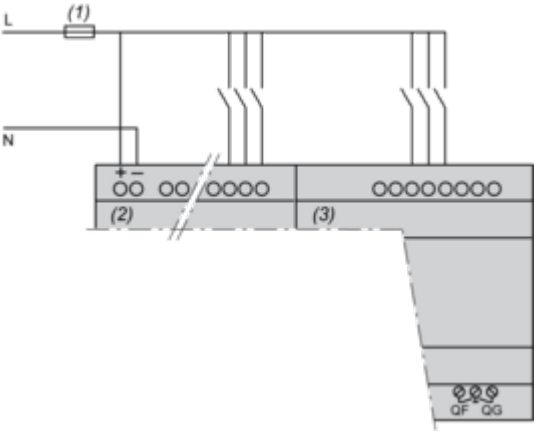

(1) 1 A quick-blow fuse or circuit-breaker.

NOTE: QF and QG: 5 A for SR3XT141••

Performance Curves

Compact and Modular Smart Relays

Electrical Durability of Relay Outputs

(in millions of operating cycles, conforming to IEC/EN 60947-5-1)
AC-12 (1)

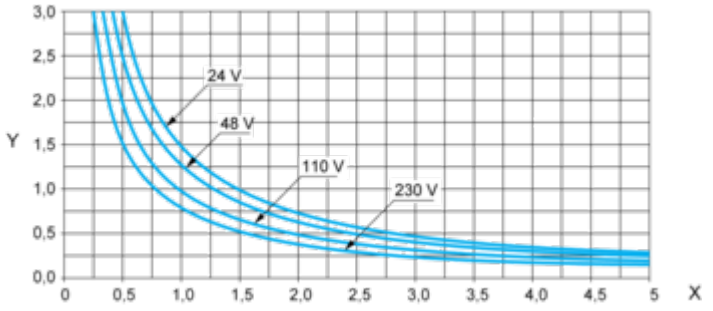

X: Current (A)
Y: Millions of operating cycles
(1) AC-12: switching resistive loads and opto-coupler isolated solid-state loads, cos ≥ 0.9.
AC-14 (1)

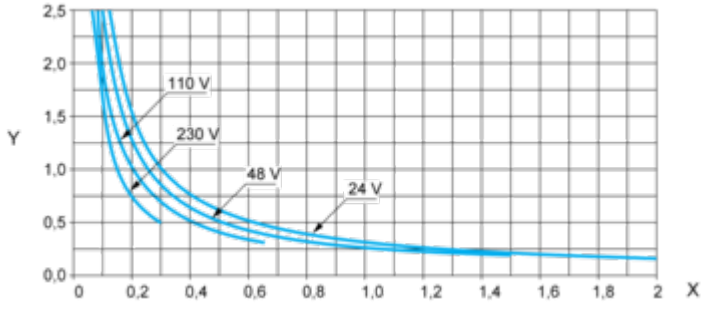

X: Current (A)
Y: Millions of operating cycles
(1) AC-14: switching small electromagnetic loads ≤ 72 VA, make: cos = 0.3, break: cos = 0.3.
AC-15 (1)

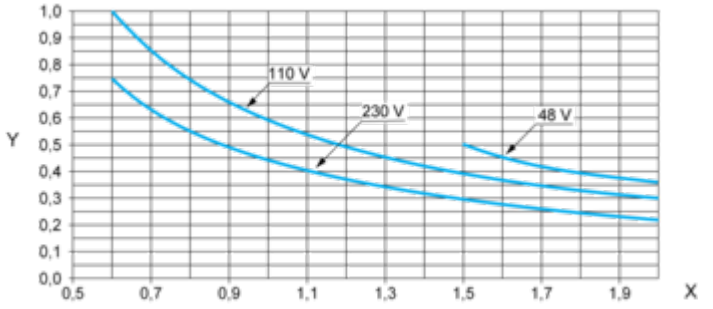

X: Current (A)
Y: Millions of operating cycles
(1) AC-15: switching electromagnetic loads ≥ 72 VA, make: cos = 0.7, break: cos = 0.4.