Product datasheet

Specifications

Green Premium™

power relay plug-in - Harmony RPF - 2 NO - 24 V DC - 30 A

Local distributor code:

398068628 RPF2ABD

EAN Code: 3389119401531

Main

Range Of Product	Harmony Electromechanical Relays
Series Name	Power
Product Or Component Type	DIN rail/panel mount relay
Device Short Name	RPF
Contacts Type And Composition	2 NO
[Uc] Control Circuit Voltage	24 V DC
Control Type	Without lockable test button
Shape Of Pin	Flat
Contacts Material	Silver tin oxide
[Ithe] Conventional Enclosed Thermal Current	25 A at -40…55 °C relays side by side without a gap 30 A at -40…55 °C 13 mm gap between two relays
Resistive Rated Load	25 A at 28 V DC 30 A at 250 V AC
Utilisation Coefficient	10 %

Complementary

Mounting Support	DIN rail Panel
Control Circuit Voltage Limits	19.2...26.4 V
[Ie] Rated Operational Current	30 A at 277 V (AC) NO conforming to UL 20 A at 28 V (DC) NO conforming to UL 30 A at 250 V (AC) NO conforming to IEC 25 A at 28 V (DC) NO conforming to IEC
[Ui] Rated Insulation Voltage	250 V conforming to IEC 300 V conforming to UL
[Uimp] Rated Impulse Withstand Voltage	4 kV during 1.2/50 µs
Maximum Switching Voltage	250 V conforming to IEC
Maximum Switching Capacity	7500 VA/700 W
Minimum Recommended Switching Capacity	6000 mW 500 mA / 12 V for NO
Operating Rate	<= 1200 cycles/hour under load <= 18000 cycles/hour no-load
Mechanical Durability	5000000 cycles
Electrical Durability	100000 cycles for resistive load
Average Coil Consumption	1.7 W
Drop-Out Voltage Threshold	>= 0.1 Uc

Disclaimer: This documentation is not intended as a substitute for and is not to be used for determining suitability or reliability of these products for specific user applications

Operate Time	25 ms
Release Time	25 ms
Average Resistance	350 Ohm at 20 °C +/- 10 %
Safety Reliability Data	B10d = 100000
Protection Category	RT II
Test Levels	Level A group mounting
Operating Position	Any position
Cad Overall Width	33.7 mm
Cad Overall Height	68.5 mm
Cad Overall Depth	39.2 mm
Net Weight	0.082 kg
Device Presentation	Complete product

Environment

Dielectric Strength	2000 V AC between poles with basic 4000 V AC between coil and contact with reinforced 1500 V AC between contacts with micro disconnection
Standards	CSA C22.2 No 14 UL 508 IEC 61810-1
Product Certifications	CSA CE GOST UL
Ambient Air Temperature For Storage	-40…85 °C
Ambient Air Temperature For Operation	-40…55 °C
Vibration Resistance	3 gn, amplitude = +/- 1 mm (f = 10…150 Hz)5 cycles in operation 10 gn, amplitude = +/- 1 mm (f = 10…150 Hz)5 cycles not operating
Ip Degree Of Protection	IP40 conforming to IEC 60529
Shock Resistance	10 gn for in operation 30 gn for not operating
Pollution Degree	3

Packing Units

Unit Type Of Package 1	PCE
Number Of Units In Package 1	1
Package 1 Height	4.500 cm
Package 1 Width	14.500 cm
Package 1 Length	19.800 cm
Package 1 Weight	82.000 g
Unit Type Of Package 2	BB1
Number Of Units In Package 2	10
Package 2 Height	4.500 cm
Package 2 Width	14.500 cm
Package 2 Length	19.800 cm

Package 2 Weight	896.000 g
Unit Type Of Package 3	S02
Number Of Units In Package 3	60
Package 3 Height	15.000 cm
Package 3 Width	30.000 cm
Package 3 Length	40.000 cm
Package 3 Weight	5.743 kg

Contractual warranty

Warranty	18 months

Sustainability

Green Premium™ label is Schneider Electric's commitment to delivering products with best-in-class environmental performance. Green Premium promises compliance with the latest regulations, transparency on environmental impacts, as well as circular and low-CO_2 products.

Guide to assessing product sustainability is a white paper that clarifies global eco-label standards and how to interpret environmental declarations.

Learn more about Green Premium >

Guide to assess a product's sustainability >

Transparency RoHS/REACh

Well-being performance

Reach Free Of Svhc

Rohs Exemption Information	Yes

Certifications & Standards

Reach Regulation	REACh Declaration
Eu Rohs Directive	Pro-active compliance (Product out of EU RoHS legal scope) EU RoHS Declaration
China Rohs Regulation	China RoHS declaration
Environmental Disclosure	Product Environmental Profile
Weee	The product must be disposed on European Union markets following specific waste collection and never end up in rubbish bins
Circularity Profile	No need of specific recycling operations

Dimensions Drawings

Dimensions

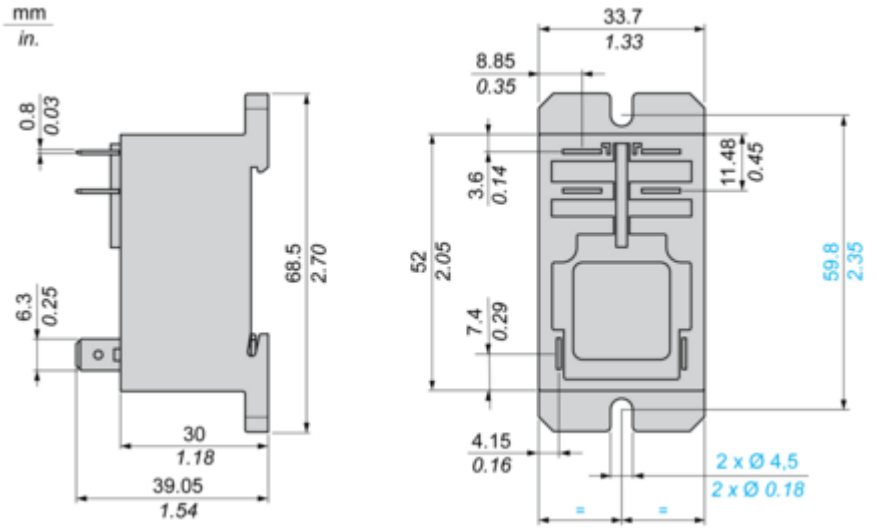

Connections and Schema

Wiring Diagram

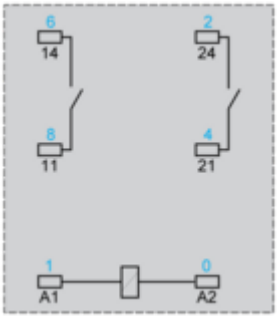

Symbols shown in blue correspond to Nema marking.

Performance Curves

Electrical Durability of Contacts

AC Resistive load

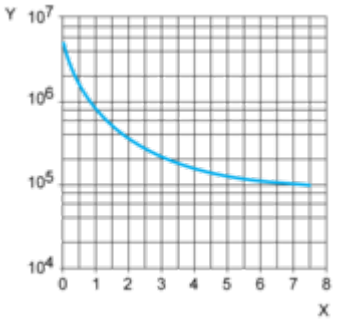

X Switching capacity (kVA)
Y Durability (number of operating cycles)

AC Reduction coefficient for inductive load (depending on power factor cos ϕ)

Durability (inductive load) = durability (resistive load) x reduction coefficient.

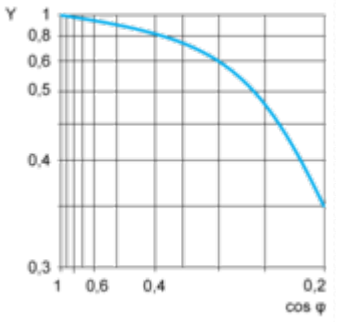

Y reduction coefficient

Maximum switching capacity on DC resistive load

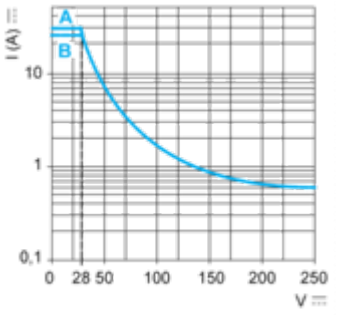

A 30 A
B 25 A
Note : These are typical curves, actual durability depends on load, environment, duty cycle, etc.