Product datasheet

Specifications

Green Premium™

Modular timing relay, 5 A, 2 CO, 0.1 s..100 h, on-Delay, 120 V AC

Local distributor code:

389834706 REXL2TMF7

EAN Code: 3389119400046

Main

Range Of Product	Harmony Timer Relays
Product Or Component Type	Single function relay
Fixing Mode	Plug-in (socket)
Discrete Output Type	Relay
Contacts Type And Composition	2 C/O
Component Name	REXL
Time Delay Type	Power on-delay
Time Delay Range	10...100 h 6...60 s 6...60 min 1...10 min 0.1...1 s 1...10 s 1...10 h
Width	21 mm

Complementary

Contacts Material	Cadmium free
[Us] Rated Supply Voltage	120 V AC 50/60 Hz
Voltage Range	0.85...1.15 Us
[In] Rated Current	5 A AC
Repeat Accuracy	+/- 0.5 %
Setting Accuracy Of Time Delay	10 % at full scale at 25 °C conforming to IEC 61812-1
Temperature Drift	0.05 %/°C
Maximum Reset Time	250 ms after time delay, on de-energisation 50 ms during time delay, on de-energisation
Voltage Drift	+/- 0.2 %/V
Maximum Switching Capacity	4 x 5 A
Maximum Temporary Permissible Current	10 A for < 10 s
Minimum Switching Current	100 mA
Electrical Durability	100000 cycles at 250 V AC resistive
Mechanical Durability	10000000 cycles
Maximum Power Consumption	2.6 VA
[Ui] Rated Insulation Voltage	250 V conforming to IEC 255 Group C 250 V conforming to VDE 0010

Disclaimer: This documentation is not intended as a substitute for and is not to be used for determining suitability or reliability of these products for specific user applications

Output Overvoltage Protection	2 J
Surge Withstand	2 kV conforming to IEC 61000-4-5 level 3
Creepage Distance	4 kV/3 conforming to IEC 60664-1
Local Signalling	1 LED (red) for output in operation 1 LED (yellow) for power ON
Number Of Functions	1
Net Weight	0.05 kg

Environment

Immunity To Microbreaks	5 ms
Dielectric Strength	2 kV for 1 mA/1 minute at 50 Hz conforming to IEC 60601-1 2 kV for 1 mA/1 minute at 50 Hz conforming to IEC 61812-1
Standards	IEC 61000-6-2 93/68/EEC EN 50081-2 IEC 61812-1 73/23/EEC IEC 60601-2 89/336/EEC IEC 60601-1
Product Certifications	cUL UL
Ambient Air Temperature For Operation	-20…60 °C
Ambient Air Temperature For Storage	-40…70 °C
Ip Degree Of Protection	IP50 conforming to IEC 60529
Vibration Resistance	0.35 mm (f= 10…55 Hz) conforming to IEC 60068-2-6
Relative Humidity	95 % without condensation conforming to IEC 60068-2-6
Resistance To Electrostatic Discharge	6 kV in contact conforming to IEC 61000-4-2 level 3 8 kV in air conforming to IEC 61000-4-2 level 3
Resistance To Electromagnetic Fields	10 V/m conforming to IEC 61000-4-3 level 3
Resistance To Fast Transients	2 kV conforming to IEC 61000-4-4 level 3
Immunity To Radioelectric Fields	10 V (0.15...80 MHz) conforming to IEC 61000-4-6 level 3
Immunity To Voltage Dips	>= 95 % / 1 s conforming to IEC 61000-4-11 30 % / 10 ms conforming to IEC 61000-4-11 60 % / 100 ms conforming to IEC 61000-4-11
Disturbance Radiated/Conducted	Class B conforming to EN 55022 (EN 55011 group 1)

Packing Units

Unit Type Of Package 1	PCE
Number Of Units In Package 1	1
Package 1 Height	3.1 cm
Package 1 Width	7.5 cm
Package 1 Length	3.1 cm
Package 1 Weight	50.0 g

Contractual warranty

Warranty	18 months

Sustainability

Green Premium™ label is Schneider Electric's commitment to delivering products with best-in-class environmental performance. Green Premium promises compliance with the latest regulations, transparency on environmental impacts, as well as circular and low-CO_2 products.

Guide to assessing product sustainability is a white paper that clarifies global eco-label standards and how to interpret environmental declarations.

Learn more about Green Premium >

Guide to assess a product's sustainability >

Transparency RoHS/REACh

Well-being performance

Mercury Free

Rohs Exemption Information	Yes

Certifications & Standards

Reach Regulation	REACh Declaration
Eu Rohs Directive	Pro-active compliance (Product out of EU RoHS legal scope)
China Rohs Regulation	China RoHS declaration
Environmental Disclosure	Product Environmental Profile
Weee	The product must be disposed on European Union markets following specific waste collection and never end up in rubbish bins
Circularity Profile	No need of specific recycling operations

Dimensions Drawings

Width 21 mm

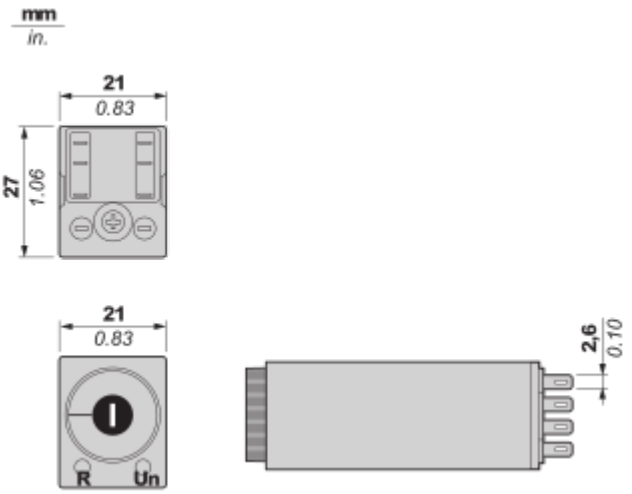

Connections and Schema

Terminal Referencing

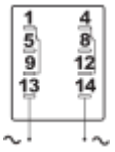

Technical Description

Function A : Power on Delay Relay

Description

The timing period T begins on energisation. After timing, the outputs close.
2 Timed C/O Contacts

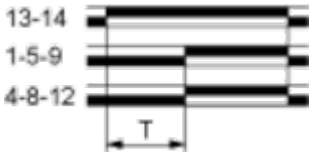

Legend

Relay de-energised

Relay energised

Output open

Output closed

R	Relay output
T	Timing period