Product datasheet

Specifications

Green Premium™

IP20 solder connector - for time delay relay

RE48ASOC8SOLD

Discontinued on: 1 Jul 2020

EAN Code: 3389110740875

Discontinued

Main

Range Of Product	Zelio Time
Product Compatibility	RE48AMH13MW RE48ATM12MW
Accessory / Separate Part Category	Connection accessories
Accessory / Separate Part Designation	IP20 solder connector
Pin Number	8 pins
Accessory / Separate Part Destination	Timing relay

Environment

Ip Degree Of Protection	IP20

Packing Units

Unit Type Of Package 1	PCE
Number Of Units In Package 1	1
Package 1 Height	3 cm
Package 1 Width	3 cm
Package 1 Length	3.5 cm
Package 1 Weight	18 g

Contractual warranty

Warranty	18 months

Disclaimer: This documentation is not intended as a substitute for and is not to be used for determining suitability or reliability of these products for specific user applications

Sustainability

Green Premium™ label is Schneider Electric's commitment to delivering products with best-in-class environmental performance. Green Premium promises compliance with the latest regulations, transparency on environmental impacts, as well as circular and low-CO_2 products.

Guide to assessing product sustainability is a white paper that clarifies global eco-label standards and how to interpret environmental declarations.

Learn more about Green Premium >

Guide to assess a product's sustainability >

Transparency RoHS/REACh

Well-being performance

Mercury Free

Rohs Exemption Information	Yes

Certifications & Standards

Reach Regulation	REACh Declaration
Eu Rohs Directive	Pro-active compliance (Product out of EU RoHS legal scope)
China Rohs Regulation	China RoHS declaration
Environmental Disclosure	Product Environmental Profile
Weee	The product must be disposed on European Union markets following specific waste collection and never end up in rubbish bins
Circularity Profile	End of Life Information

Dimensions Drawings

Connector
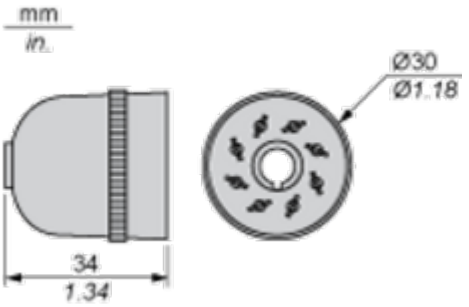
8-Pin Connector