Product datasheet

Specifications

Green Premium™

Modular timing relay, 5 A, 2 CO, 0.2 s...300 h, time delay, 24...240 V AC/DC

Local distributor code:

389834667 RE48AML12MW

EAN Code: 3389110649598

Main

Range Of Product	Harmony Timer Relays
Product Or Component Type	Multifunction relay
Electrical Connection	Plug-in sub-base 11 pin(s)
Width	48 mm
Discrete Output Type	Relay
Contacts Type And Composition	2 C/O timed contacts, AgNi (cadmium free)
Component Name	RE48A
Time Delay Type	Power on-delay Interval Off-delay Symmetrical flashing
Time Delay Range	0.5...30 s 5...300 s 0.2...12 min 0.5...30 h 2...120 s 0.05...3 s 0.2...12 s 0.02...1.2 s 2...120 min 5...300 min 0.5...30 min 5...300 h 2...120 h 0.2...12 h
[Us] Rated Supply Voltage	24...240 V AC/DC 50/60 Hz
Voltage Range	0.85...1.1 Us AC 0.9...1.1 Us DC
[In] Rated Current	5 A

Complementary

Product Front Plate Size	48 x 48 mm
Control Type	Selector switch front panel
Housing Material	Self-extinguishing
Repeat Accuracy	+/- 0.2 % of the maximum setting value conforming to IEC 61812-1
Temperature Drift	+/- 0.02 %/°C of the maximum setting value conforming to IEC 61812-1
Voltage Drift	+/- 0.2 %/V of the maximum setting value at 48...240 V +/- 1 %/V of the maximum setting value at 24...48 V
Setting Accuracy Of Time Delay	+/- 5 % of full scale at 25 °C conforming to IEC 61812-1
Minimum Pulse Duration	20 ms

Disclaimer: This documentation is not intended as a substitute for and is not to be used for determining suitability or reliability of these products for specific user applications

Reset Time	25 ms on de-energisation
Pick Up Duration	55 ms
On-Load Factor	100 %
Power Consumption In Va	1.1 VA at 24 V 4.8 VA at 240 V
Power Consumption In W	0.5 W at 24 V 1.7 W at 240 V
Breaking Capacity	1250 VA
Minimum Switching Current	100 mA
Maximum Switching Current	5 A
Maximum Switching Voltage	250 V AC/DC
Electrical Durability	100000 cycles
Mechanical Durability	30000000 cycles
Output Voltage	240 V at 5 A AC-12 30 V at 2 A DC-13 240 V at 1.5 A AC-15
Marking	CE
Surge Withstand	1 kV differential mode conforming to IEC 61000-4-5 level 3 2 kV common mode conforming to IEC 61000-4-5 level 3
Mounting Support	Base mounted: socket Panel mounted: system supplied with the product
Local Signalling	1 LED (yellow) for output relay state LED indicator (green) for flashing: relay energised timing in progress LED indicator (green) for on steady: relay energised, no timing in progress
Net Weight	0.14 kg
Number Of Functions	4

Environment

Humidity Drift	+/- 0.05 %/%RH of the maximum setting value conforming to IEC 61812-1
Immunity To Microbreaks	10 ms
Dielectric Strength	1 kV 1 mA/1 minute conforming to IEC 61812-1
Protection Against Electric Shocks	4 kV class III conforming to IEC 60664-1 4 kV class III conforming to IEC 61812-1
Standards	IEC 61812-1 EN 50081-1/2 93/68/EEC 89/336/EEC EN 50082-1/2 IEC 60669-2-3 73/23/EEC
Product Certifications	UL cULus CSA C-Tick
Ambient Air Temperature For Storage	-40…70 °C
Ambient Air Temperature For Operation	-20…50 °C
Ip Degree Of Protection	IP40 (housing) conforming to IEC 60529 IP50 (front face) conforming to IEC 60529
Vibration Resistance	0.35 mm (f= 10…55 Hz) conforming to IEC 60068-2-6
Relative Humidity	93 % without condensation conforming to IEC 60068-2-3

Resistance To Electrostatic Discharge	6 kV in contact conforming to IEC 61000-4-2 level 3 8 kV in air conforming to IEC 61000-4-2 level 3
Resistance To Electromagnetic Fields	10 V/m 26 MHz to 1 GHz conforming to IEC 61000-4-3 level 3
Resistance To Fast Transients	2 kV (capacitive connecting clip) conforming to IEC 61000-4-4 level 4 4 kV (direct) conforming to IEC 61000-4-4 level 4
Immunity To Radioelectric Fields	10 V (0.15...80 MHz) conforming to IEC 61000-4-6 level 3
Immunity To Voltage Dips	30 % / 10 ms conforming to IEC 61000-4-11 60 % / 100 ms conforming to IEC 61000-4-11 95 % / 5 s conforming to IEC 61000-4-11
Disturbance Radiated/Conducted	Class B 0.15...30 MHz conforming to EN 55022 (EN 55011 group 1)

Packing Units

Unit Type Of Package 1	PCE
Number Of Units In Package 1	1
Package 1 Height	5.7 cm
Package 1 Width	6.2 cm
Package 1 Length	10.5 cm
Package 1 Weight	130 g
Unit Type Of Package 2	S02
Number Of Units In Package 2	30
Package 2 Height	15 cm
Package 2 Width	30 cm
Package 2 Length	40 cm
Package 2 Weight	4.35 kg

Contractual warranty

Warranty	18 months

Sustainability

Green Premium™ label is Schneider Electric's commitment to delivering products with best-in-class environmental performance. Green Premium promises compliance with the latest regulations, transparency on environmental impacts, as well as circular and low-CO_2 products.

Guide to assessing product sustainability is a white paper that clarifies global eco-label standards and how to interpret environmental declarations.

Learn more about Green Premium >

Guide to assess a product's sustainability >

Transparency RoHS/REACh

Well-being performance

Mercury Free

Rohs Exemption Information	Yes

Certifications & Standards

Reach Regulation	REACh Declaration
Eu Rohs Directive	Pro-active compliance (Product out of EU RoHS legal scope)
China Rohs Regulation	China RoHS declaration
Environmental Disclosure	Product Environmental Profile
Weee	The product must be disposed on European Union markets following specific waste collection and never end up in rubbish bins
Circularity Profile	End of Life Information

Dimensions Drawings

Width 48 mm

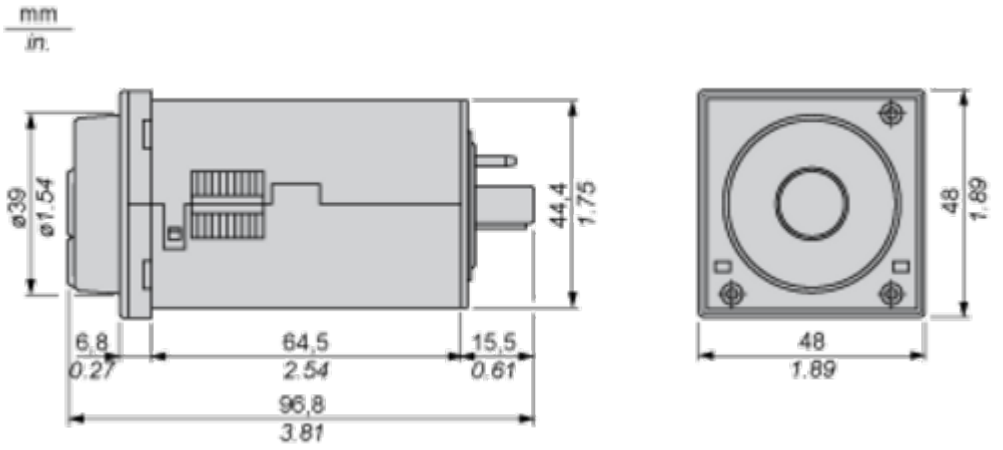

Mounting and Clearance

Panel Cut-Out and Mounting

Panel Cut-Out

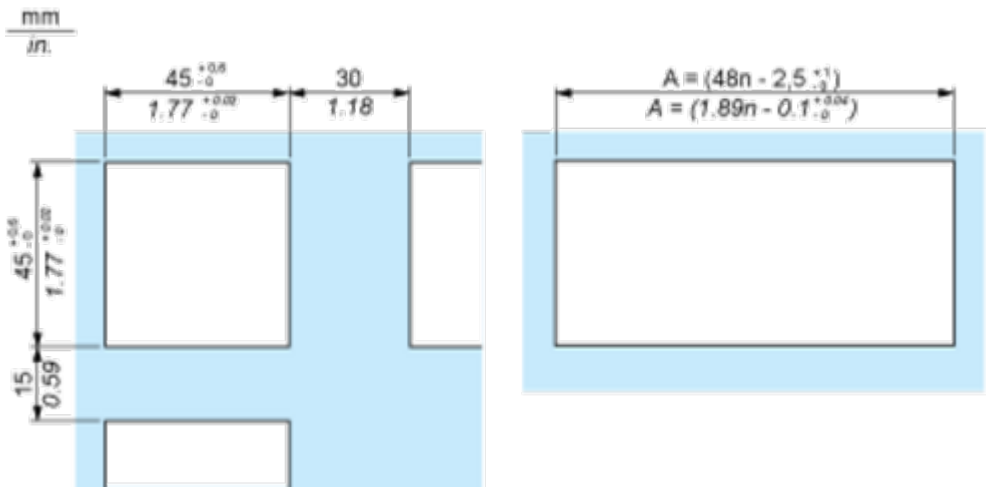

n Number of devices mounted side-by-side

Mounting

Cover positioning and mounting

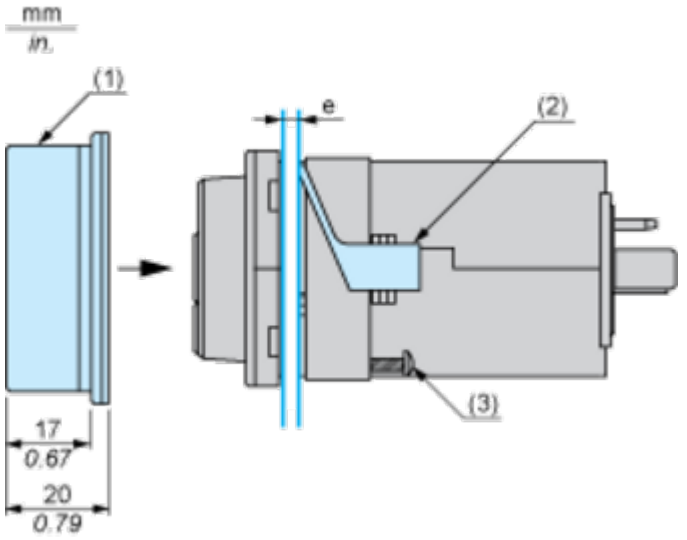

e Panel thickness
1 Protective cover
2 Panel mounting frame
3 Locating screw

Connections and Schema

Wiring Diagram

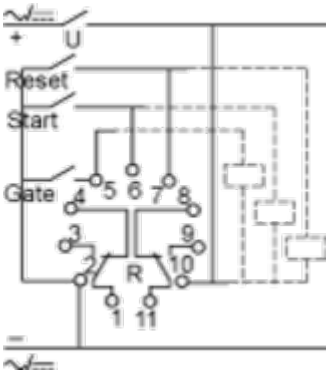

Technical Description

Function A : Power on Delay Relay

Description

The timing period T begins on energisation. After timing, the output R closes.

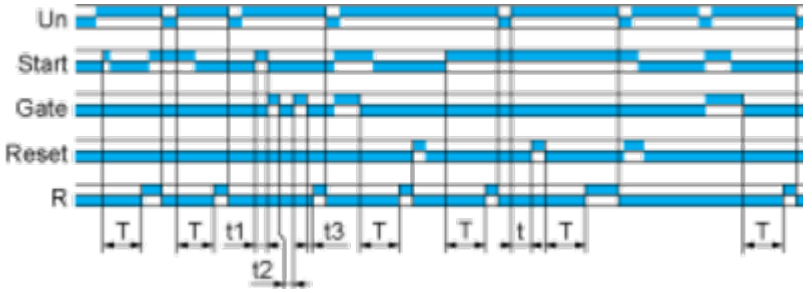

T = t1 + t2 + t3

Function B : Interval Relay with Control Signal

Description

After power-up, pulsing or maintaining control contact C starts the timing T. The output R closes for the duration of the timing period T then reverts to its initial state.

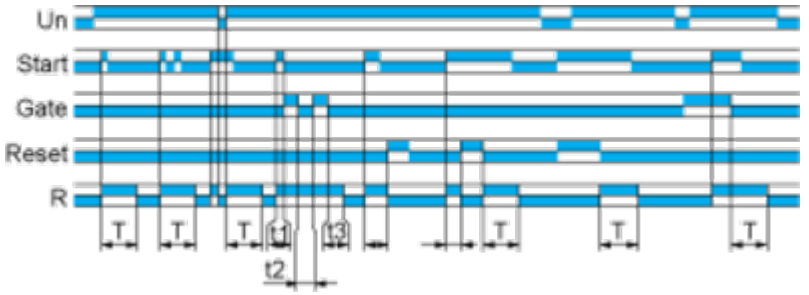

T = t1 + t2 + t3

Function C : Off-Delay Relay with Control Signal

Description

After power-up and closing of the control contact, the output closes. When control contact re-opens, timing T starts. At the end of the timing period, the output reverts to their initial state.

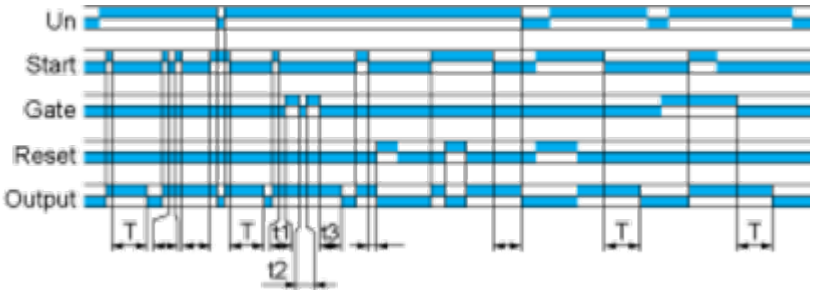

T = t1 + t2 + t3

Function Di : Symmetrical Flasher Relay (Starting Pulse On)

Description

Repetitive cycle with two timing periods T of equal duration, with output changing state at the end of each timing period T.

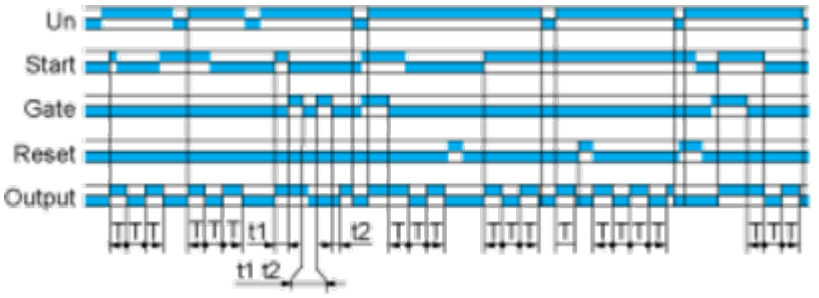

Legend

Relay de-energised
Relay energised
Output open
Output closed

C	Control contact
G	Gate
R	Relay or solid state output
R1/R2	2 timed outputs
R2 inst.	The second output is instantaneous if the right position is selected
T	Timing period
Ta -	Adjustable On-delay
Tr -	Adjustable Off-delay
U	Supply