Product datasheet

Specifications

Off-delay Timing Relay - 0.05s… 10min - 24…240V AC/DC - 2C/O

Local distributor code:

403001800 RE22R2KMR

EAN Code: 3606480792465

Main

Range Of Product	Harmony Timer Relays
Product Or Component Type	Single function relay
Discrete Output Type	Relay
Device Short Name	RE22
Nominal Output Current	5 A

Complementary

Contacts Type And Composition	2 C/O timed contact, cadmium free
Time Delay Type	Delay on de-energization
Time Delay Range	10...100 s 0.05...1 s 30...300 s 3...30 s 1...10 min 1...10 s 0.3...3 s
Control Type	Rotary knob Potentiometer external
[Us] Rated Supply Voltage	24...240 V AC/DC 50/60 Hz
Release Input Voltage	<= 2.4 V
Voltage Range	0.85...1.1 Us
Supply Frequency	50...60 Hz +/- 5 %
Connections - Terminals	Screw terminals, 1 x 0.5...1 x 3.3 mm² (AWG 20...AWG 12) solid without cable end Screw terminals, 2 x 0.5...2 x 2.5 mm² (AWG 20...AWG 14) solid without cable end Screw terminals, 1 x 0.2...1 x 2.5 mm² (AWG 24...AWG 14) flexible with cable end Screw terminals, 2 x 0.2...2 x 1.5 mm² (AWG 24...AWG 16) flexible with cable end
Tightening Torque	0.6…1 N.m conforming to IEC 60947-1
Housing Material	Self-extinguishing
Repeat Accuracy	+/- 0.5 % conforming to IEC 61812-1
Temperature Drift	+/- 0.05 %/°C
Voltage Drift	+/- 0.2 %/V
Setting Accuracy Of Time Delay	+/- 10 % of full scale at 25 °C conforming to IEC 61812-1
Insulation Resistance	100 MOhm at 500 V DC conforming to IEC 60664-1
Recovery Time	100 ms on de-energisation
Immunity To Microbreaks	10 ms
Power Consumption In Va	3 VA at 240 V AC

Disclaimer: This documentation is not intended as a substitute for and is not to be used for determining suitability or reliability of these products for specific user applications

Power Consumption In W	2 W at 240 V DC
Switching Capacity In Va	1250 VA
Minimum Switching Current	10 mA at 5 V DC
Maximum Switching Current	5 A
Maximum Switching Voltage	250 V AC
Electrical Durability	100000 cycles, 2 A at 24 V, DC-1 100000 cycles, 5 A at 250 V, AC-1
Mechanical Durability	10000000 cycles
Rated Impulse Withstand Voltage	5 kV for 1.2…50 µs conforming to IEC 60664-1
Power On Delay	350 ms
Creepage Distance	4 kV/3 conforming to IEC 60664-1
Overvoltage Category	III conforming to IEC 60664-1
Safety Reliability Data	B10d = 160000 MTTFd = 171.2 years
Mounting Position	Any position
Mounting Support	35 mm DIN rail conforming to IEC 60715
Status Led	LED backlight green (steady) for dial pointer indication LED yellow (steady) for output relay energised LED yellow (steady) for power ON
Width	22.5 mm
Net Weight	0.1 kg
Number Of Functions	1

Environment

Dielectric Strength	2.5 kV for 1 mA/1 minute at 50 Hz between relay output and power supply with basic insulation conforming to IEC 61812-1
Standards	IEC 61812-1 UL 508
Directives	2006/95/EC - low voltage directive 2004/108/EC - electromagnetic compatibility
Product Certifications	EAC UL RCM GL CCC CSA CE
Ambient Air Temperature For Operation	-20…60 °C
Ambient Air Temperature For Storage	-40…70 °C
Ip Degree Of Protection	IP40 housing: conforming to IEC 60529 IP20 terminals: conforming to IEC 60529 IP50 front panel: conforming to IEC 60529
Pollution Degree	3 conforming to IEC 60664-1
Vibration Resistance	20 m/s² (f= 10…150 Hz) conforming to IEC 60068-2-6
Shock Resistance	15 gn not operating for 11 ms conforming to IEC 60068-2-27 5 gn in operation for 11 ms conforming to IEC 60068-2-27
Relative Humidity	95 % at 25…55 °C

Electromagnetic Compatibility	Fast transients immunity test - test level: 1 kV level 3 (capacitive connecting clip) conforming to IEC 61000-4-4 Surge immunity test - test level: 1 kV level 3 (differential mode) conforming to IEC 61000-4-5 Surge immunity test - test level: 2 kV level 3 (common mode) conforming to IEC 61000-4-5 Electrostatic discharge - test level: 6 kV level 3 (contact discharge) conforming to IEC 61000-4-2 Electrostatic discharge - test level: 8 kV level 3 (air discharge) conforming to IEC 61000-4-2 Radiated radio-frequency electromagnetic field immunity test - test level: 10 V/m level 3 (80 MHz...1 GHz) conforming to IEC 61000-4-3 Conducted RF disturbances - test level: 10 V level 3 (0.15...80 MHz) conforming to IEC 61000-4-6 Fast transient bursts - test level: 2 kV level 3 (direct contact) conforming to IEC 61000-4-4 Immunity to microbreaks and voltage drops - test level: 30 % (500 ms) conforming to IEC 61000-4-11 Immunity to microbreaks and voltage drops - test level: 100 % (20 ms) conforming to IEC 61000-4-11

Packing Units

Unit Type Of Package 1	PCE
Number Of Units In Package 1	1
Package 1 Height	2.6 cm
Package 1 Width	8.2 cm
Package 1 Length	9.5 cm
Package 1 Weight	109.0 g
Unit Type Of Package 2	S02
Number Of Units In Package 2	40
Package 2 Height	15.0 cm
Package 2 Width	30.0 cm
Package 2 Length	40.0 cm
Package 2 Weight	4.694 kg
Unit Type Of Package 3	P06
Number Of Units In Package 3	640
Package 3 Height	60.0 cm
Package 3 Width	80.0 cm
Package 3 Length	60.0 cm
Package 3 Weight	86.18 kg

Contractual warranty

Warranty	18 months

Sustainability

Green Premium™ label is Schneider Electric's commitment to delivering products with best-in-class environmental performance. Green Premium promises compliance with the latest regulations, transparency on environmental impacts, as well as circular and low-CO_2 products.

Guide to assessing product sustainability is a white paper that clarifies global eco-label standards and how to interpret environmental declarations.

Learn more about Green Premium >

Guide to assess a product's sustainability >

Transparency RoHS/REACh

Well-being performance

Mercury Free

Rohs Exemption Information	Yes

Certifications & Standards

Reach Regulation	REACh Declaration
Eu Rohs Directive	Pro-active compliance (Product out of EU RoHS legal scope)
China Rohs Regulation	China RoHS declaration
Environmental Disclosure	Product Environmental Profile
Circularity Profile	End of Life Information

Dimensions Drawings

Dimensions

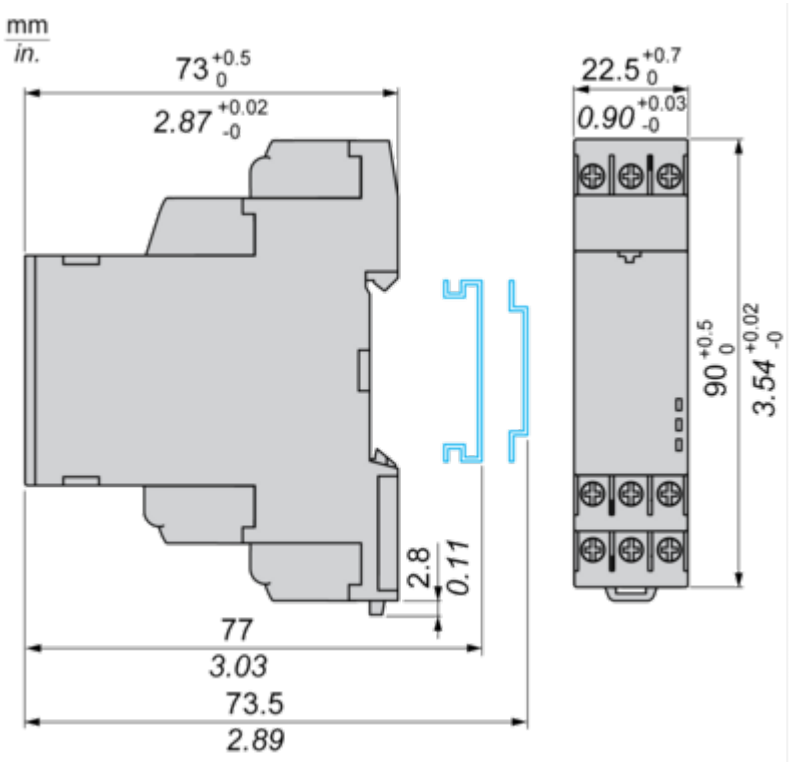

Connections and Schema

Wiring Diagram

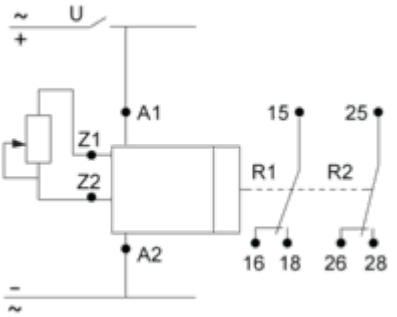

Technical Description

Function K: Delay On De-energization without Auxillary Supply

Description

On energisation of power supply, the output(s) R close(s).On de-energisation of power supply, timing period T starts and at the end of this period, the output(s) R revert(s) to its/their initial state.The energization of power supply > Tk is necessary to sustain the timing period T.

Function: 1 Output

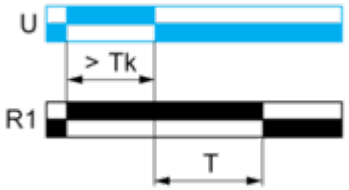

Tk > 1s

Function: 2 Outputs

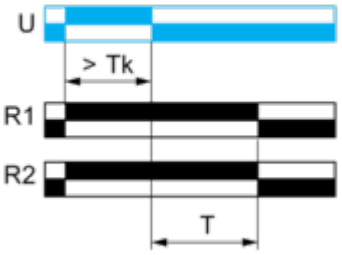

Tk > 1s

Legend

Relay de-energised

Relay energised

Output open

Output closed

U -	Supply
T -	Timing period
R1/R2 -	2 timed outputs