Product datasheet

Specifications

Green Premium™

On and Off-delay Timing Relay - 0.05s…300h - 24…240V AC/DC - 1C/O

Local distributor code:

402995849 RE22R1ACMR

EAN Code: 3606480792403

Main

Range Of Product	Harmony Timer Relays
Product Or Component Type	Dual function relay
Discrete Output Type	Relay
Device Short Name	RE22
Nominal Output Current	8 A

Complementary

Contacts Type And Composition	1 C/O timed contact, cadmium free
Time Delay Type	On-delay and off-delay
Time Delay Range	3...30 min 1...10 s 30...300 s 10...100 s 3...30 s 30...300 min 30...300 h 0.3...3 s 0.05...1 s 3...30 h
Control Type	Rotary knob Diagnostic button Potentiometer external
[Us] Rated Supply Voltage	24...240 V AC/DC 50/60 Hz
Release Input Voltage	<= 2.4 V
Voltage Range	0.85...1.1 Us
Supply Frequency	50...60 Hz +/- 5 %
Connections - Terminals	Screw terminals, 1 x 0.5...1 x 3.3 mm² (AWG 20...AWG 12) solid without cable end Screw terminals, 2 x 0.5...2 x 2.5 mm² (AWG 20...AWG 14) solid without cable end Screw terminals, 1 x 0.2...1 x 2.5 mm² (AWG 24...AWG 14) flexible with cable end Screw terminals, 2 x 0.2...2 x 1.5 mm² (AWG 24...AWG 16) flexible with cable end
Tightening Torque	0.6…1 N.m conforming to IEC 60947-1
Housing Material	Self-extinguishing
Repeat Accuracy	+/- 0.5 % conforming to IEC 61812-1
Temperature Drift	+/- 0.05 %/°C
Voltage Drift	+/- 0.2 %/V
Setting Accuracy Of Time Delay	+/- 10 % of full scale at 25 °C conforming to IEC 61812-1
Control Signal Pulse Width	100 ms with load in parallel 30 ms
Insulation Resistance	100 MOhm at 500 V DC conforming to IEC 60664-1

Disclaimer: This documentation is not intended as a substitute for and is not to be used for determining suitability or reliability of these products for specific user applications

Recovery Time	120 ms on de-energisation
Immunity To Microbreaks	10 ms
Power Consumption In Va	3 VA at 240 V AC
Power Consumption In W	1.5 W at 240 V DC
Switching Capacity In Va	2000 VA
Minimum Switching Current	10 mA at 5 V DC
Maximum Switching Current	8 A
Maximum Switching Voltage	250 V AC
Electrical Durability	100000 cycles, 8 A at 250 V, AC-1 100000 cycles, 2 A at 24 V, DC-1
Mechanical Durability	10000000 cycles
Rated Impulse Withstand Voltage	5 kV for 1.2…50 µs conforming to IEC 60664-1
Power On Delay	100 ms
Creepage Distance	4 kV/3 conforming to IEC 60664-1
Overvoltage Category	III conforming to IEC 60664-1
Safety Reliability Data	B10d = 190000 MTTFd = 205.4 years
Mounting Position	Any position
Mounting Support	35 mm DIN rail conforming to IEC 60715
Status Led	LED backlight green (steady) for dial pointer indication LED yellow (steady) for output relay energised LED yellow (fast flashing) for timing in progress and output relay de-energised LED yellow (slow flashing) for timing in progress and output relay energised
Width	22.5 mm
Net Weight	0.1 kg
Number Of Functions	2

Environment

Dielectric Strength	2.5 kV for 1 mA/1 minute at 50 Hz between relay output and power supply with basic insulation conforming to IEC 61812-1
Standards	IEC 61812-1 UL 508
Directives	2006/95/EC - low voltage directive 2004/108/EC - electromagnetic compatibility
Product Certifications	CE CCC GL UL CSA EAC RCM
Ambient Air Temperature For Operation	-20…60 °C
Ambient Air Temperature For Storage	-40…70 °C
Ip Degree Of Protection	IP40 housing: conforming to IEC 60529 IP50 front face: conforming to IEC 60529 IP20 terminals: conforming to IEC 60529
Pollution Degree	3 conforming to IEC 60664-1
Vibration Resistance	20 m/s² (f= 10…150 Hz) conforming to IEC 60068-2-6

Shock Resistance	15 gn not operating for 11 ms conforming to IEC 60068-2-27 5 gn in operation for 11 ms conforming to IEC 60068-2-27
Relative Humidity	95 % at 25…55 °C
Electromagnetic Compatibility	Fast transients immunity test - test level: 1 kV level 3 (capacitive connecting clip) conforming to IEC 61000-4-4 Surge immunity test - test level: 1 kV level 3 (differential mode) conforming to IEC 61000-4-5 Surge immunity test - test level: 2 kV level 3 (common mode) conforming to IEC 61000-4-5 Electrostatic discharge - test level: 6 kV level 3 (contact discharge) conforming to IEC 61000-4-2 Electrostatic discharge - test level: 8 kV level 3 (air discharge) conforming to IEC 61000-4-2 Radiated radio-frequency electromagnetic field immunity test - test level: 10 V/m level 3 (80 MHz...1 GHz) conforming to IEC 61000-4-3 Conducted RF disturbances - test level: 10 V level 3 (0.15...80 MHz) conforming to IEC 61000-4-6 Fast transient bursts - test level: 2 kV level 3 (direct contact) conforming to IEC 61000-4-4 Immunity to microbreaks and voltage drops - test level: 30 % (500 ms) conforming to IEC 61000-4-11 Immunity to microbreaks and voltage drops - test level: 100 % (20 ms) conforming to IEC 61000-4-11

Packing Units

Unit Type Of Package 1	PCE
Number Of Units In Package 1	1
Package 1 Height	2.6 cm
Package 1 Width	8.2 cm
Package 1 Length	9.5 cm
Package 1 Weight	100.0 g
Unit Type Of Package 2	S02
Number Of Units In Package 2	40
Package 2 Height	15.0 cm
Package 2 Width	30.0 cm
Package 2 Length	40.0 cm
Package 2 Weight	4.405 kg
Unit Type Of Package 3	P06
Number Of Units In Package 3	640
Package 3 Height	50.0 cm
Package 3 Width	80.0 cm
Package 3 Length	60.0 cm
Package 3 Weight	79.78 kg

Contractual warranty

Warranty	18 months

Sustainability

Green Premium™ label is Schneider Electric's commitment to delivering products with best-in-class environmental performance. Green Premium promises compliance with the latest regulations, transparency on environmental impacts, as well as circular and low-CO_2 products.

Guide to assessing product sustainability is a white paper that clarifies global eco-label standards and how to interpret environmental declarations.

Learn more about Green Premium >

Guide to assess a product's sustainability >

Transparency RoHS/REACh

Well-being performance

Mercury Free

Rohs Exemption Information	Yes

Certifications & Standards

Reach Regulation	REACh Declaration
Eu Rohs Directive	Pro-active compliance (Product out of EU RoHS legal scope)
China Rohs Regulation	China RoHS declaration
Environmental Disclosure	Product Environmental Profile
Circularity Profile	End of Life Information

Dimensions Drawings

Dimensions

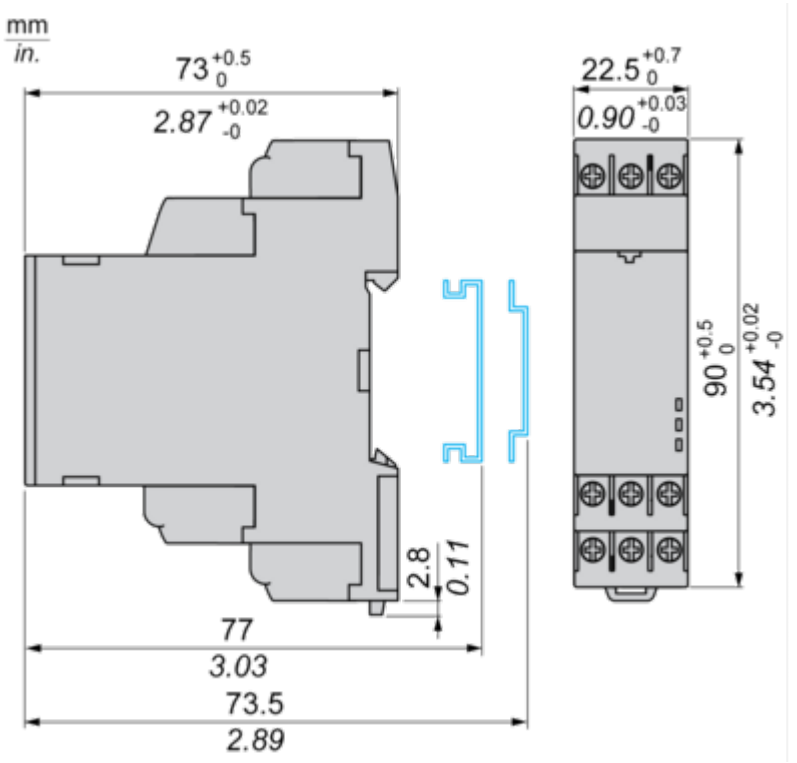

Connections and Schema

Wiring Diagram

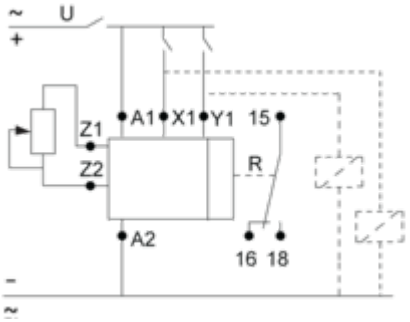

Technical Description

Function Ac: On-Delay & Off-Delay with Control Signal

Description

After energisation of power supply and energization of Y1 causes the timing period T to start.
At the end of this timing period, the output(s) R close(s).
When deenergization of Y1, the timing T starts.
At the end of this timing period T,the output(s) R revert(s) to its/their initial position.
The second output (R2) can be either timed (when set to "TIMED") or instantaneous (when set to "INST").

Function: 1 Output

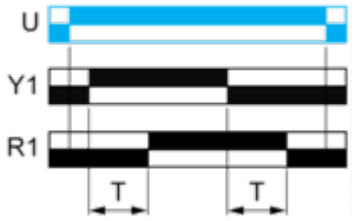

Function: 2 Outputs

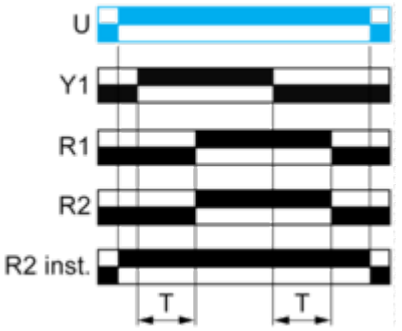

Function Act: On-Delay & Off-Delay with Control Signal & With Pause / Summation Control

Description

After energisation of power supply and energization of Y1 causes the timing period T to start and the timing can be interrupted / paused each time X1 energizes.When the cumulative total of time periods elapsed reaches the pre-set value T, the output(s) R close(s).When deenergization of Y1, the timing T starts and the timing can be interrupted / paused each time X1 energizes. When the cumulative total of time periods elapsed reaches the pre-set value T, the output(s) R revert(s) to its/their initial position.The second output (R2) can be either timed (when set to "TIMED") or instantaneous (when set to "INST").

Function: 1 Output

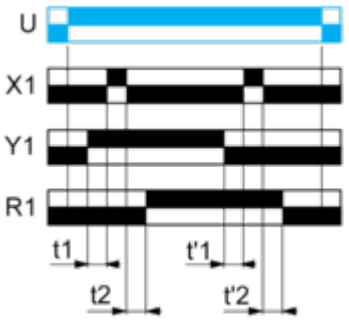

T = t1 + t2 +…
T = t'1 + t'2 +…

Function: 2 Outputs

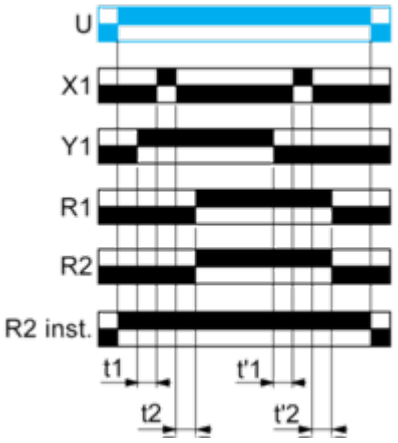

T = t1 + t2 +…
T = t'1 + t'2 +…

Legend

Relay de-energised
Relay energised
Output open
Output closed

U -	Supply
T -	Timing period
R1/R2 -	2 timed outputs
R2 inst. -	The second output is instantaneous if the right position is selected

X1 -	Pause / Summation control
Y1 -	Retrigger / Restart control