# Product datasheet

Specifications

## on-delay timing relay - 1 s..100 h - 24..240 V AC - 1 OC

Local distributor code:

397857283 RE17RHMU

**EAN Code: 3606480552700**

## Main

| | |
|---|---|
| **Range Of Product** | Harmony Timer Relays |
| **Product Or Component Type** | Dual function relay |
| **Discrete Output Type** | Relay |
| **Width** | 17.5 mm |
| **Device Short Name** | RE17R |
| **Time Delay Type** | Interval |
| **Time Delay Range** | 10...100 h<br>0.1...1 s<br>6...60 min<br>1...10 s<br>1...10 min<br>6...60 s<br>1...10 h |
| **Nominal Output Current** | 8 A |

## Complementary

| | |
|---|---|
| **Contacts Type And Composition** | 1 C/O |
| **Contacts Material** | Cadmium free |
| **Height** | 90 mm |
| **Depth** | 72 mm |
| **Control Type** | Selector switch front panel |
| **[Us] Rated Supply Voltage** | 24...240 V AC 50/60 Hz<br>24 V DC |
| **Voltage Range** | 0.85...1.1 Us |
| **Supply Frequency** | 50...60 Hz +/- 5 % |
| **Release Of Input Voltage** | 10 V |
| **Connections - Terminals** | Screw terminals, 1 x 0.5...1 x 3.3 mm² (AWG 20...AWG 12) solid without cable end<br>Screw terminals, 2 x 0.5...2 x 2.5 mm² (AWG 20...AWG 14) solid without cable end<br>Screw terminals, 1 x 0.2...1 x 2.5 mm² (AWG 24...AWG 14) flexible with cable end<br>Screw terminals, 2 x 0.2...2 x 1.5 mm² (AWG 24...AWG 16) flexible with cable end |
| **Tightening Torque** | 0.6…1 N.m conforming to IEC 60947-1 |
| **Housing Material** | Self-extinguishing |
| **Repeat Accuracy** | +/- 0.5 % conforming to IEC 61812-1 |
| **Temperature Drift** | +/- 0.05 %/°C |
| **Voltage Drift** | +/- 0.2 %/V |
| **Setting Accuracy Of Time Delay** | +/- 10 % of full scale at 25 °C conforming to IEC 61812-1 |

Disclaimer: This documentation is not intended as a substitute for and is not to be used for determining suitability or reliability of these products for specific user applications

| | |
|---|---|
| **Control Signal Pulse Width** | 100 ms with load in parallel typical<br>30 ms typical |
| **Insulation Resistance** | 100 MOhm at 500 V DC conforming to IEC 60664-1 |
| **Reset Time** | 120 ms on de-energisation typical |
| **On-Load Factor** | 100 % |
| **Power Consumption In Va** | 0…32 VA at 240 V AC |
| **Maximum Power Consumption In W** | 0.6 W at 24 V DC |
| **Minimum Switching Current** | 10 mA at 5 V DC |
| **Maximum Switching Current** | 8 A AC/DC |
| **Maximum Switching Voltage** | 250 V AC |
| **Breaking Capacity** | 2000 VA |
| **Operating Frequency** | 10 Hz |
| **Electrical Durability** | 100000 cycles (8 A at 250 V AC maximum) for resistive load |
| **Mechanical Durability** | 10000000 cycles |
| **Dielectric Strength** | 2.5 kV 1 mA/1 minute 50 Hz conforming to IEC 61812-1 |
| **[Uimp] Rated Impulse Withstand Voltage** | 5 kV during 1.2/50 µs |
| **Power On Delay** | 100 ms |
| **Marking** | CE |
| **Creepage Distance** | 4 kV/3 conforming to IEC 60664-1 |
| **Safety Reliability Data** | B10d = 270000<br>MTTFd = 296.8 years |
| **Mounting Position** | Any position in relation to normal vertical mounting plane |
| **Mounting Support** | 35 mm DIN rail conforming to IEC 60715 |
| **Local Signalling** | LED indicator for on steady: relay energised, no timing in progress<br>LED indicator for flashing: timing in progress 80 % ON and 20 % OFF<br>LED indicator for pulsing: relay de-energised, no timing in progress (except function Di-D, Li-L) 5 % ON and 95 % OFF |
| **Net Weight** | 0.07 kg |
| **Number Of Functions** | 2 |
| **Time Delay Type** | H, Ht |
| **Functionality** | On-delay timing |
| **Compatibility Code** | RE17 |

# Environment

| | |
|---|---|
| **Immunity To Microbreaks** | 20 ms |
| **Standards** | IEC 61000-6-4<br>IEC 61000-6-1<br>2006/95/EC<br>IEC 61000-6-3<br>IEC 61812-1<br>2004/108/EC<br>IEC 61000-6-2 |
| **Product Certifications** | cULus<br>CSA<br>GL |
| **Ambient Air Temperature For Storage** | -30…60 °C |
| **Ambient Air Temperature For Operation** | -20…60 °C |

| | |
|---|---|
| **Ip Degree Of Protection** | IP20 (terminal block) conforming to IEC 60529<br>IP40 (housing) conforming to IEC 60529<br>IP50 (front panel) conforming to IEC 60529 |
| **Vibration Resistance** | 20 m/s² (f= 10…150 Hz) conforming to IEC 60068-2-6 |
| **Shock Resistance** | 15 gn for 11 ms conforming to IEC 60068-2-27 |
| **Relative Humidity** | 93 % without condensation conforming to IEC 60068-2-30 |
| **Electromagnetic Compatibility** | Electrostatic discharge immunity test: (in contact), level 3, 6 kV, conforming to IEC 61000-4-2<br>Electrostatic discharge immunity test: (in air), level 3, 8 kV, conforming to IEC 61000-4-2<br>Susceptibility to electromagnetic fields: (80 MHz to 1 GHz), level 3, 10 V/m, conforming to IEC 61000-4-3<br>Electrical fast transient/burst immunity test: (capacitive connecting clip), level 3, 1 kV, conforming to IEC 61000-4-4<br>Electrical fast transient/burst immunity test: (direct), level 3, 2 kV, conforming to IEC 61000-4-4<br>1.2/50 µs shock waves immunity test: (differential mode), level 3, 1 kV, conforming to IEC 61000-4-5<br>1.2/50 µs shock waves immunity test: (common mode), level 3, 2 kV, conforming to IEC 61000-4-5<br>Conducted RF disturbances: (0.15...80 MHz), level 3, 10 V, conforming to IEC 61000-4-6<br>Voltage dips and interruptions immunity test: (1 cycle), 0 %, conforming to IEC 61000-4-11<br>Voltage dips and interruptions immunity test: (25/30 cycles), 70 %, conforming to IEC 61000-4-11<br>Conducted and radiated emissions: , class B, conforming to EN 55022 |

## Packing Units

| | |
|---|---|
| **Unit Type Of Package 1** | PCE |
| **Number Of Units In Package 1** | 1 |
| **Package 1 Height** | 2.400 cm |
| **Package 1 Width** | 10.800 cm |
| **Package 1 Length** | 13.400 cm |
| **Package 1 Weight** | 78.000 g |
| **Unit Type Of Package 2** | S02 |
| **Number Of Units In Package 2** | 40 |
| **Package 2 Height** | 15.000 cm |
| **Package 2 Width** | 30.000 cm |
| **Package 2 Length** | 40.000 cm |
| **Package 2 Weight** | 3.690 kg |

## Contractual warranty

| | |
|---|---|
| **Warranty** | 18 months |

## Sustainability

**Green Premium™ label** is Schneider Electric's commitment to delivering products with best-in-class environmental performance. Green Premium promises compliance with the latest regulations, transparency on environmental impacts, as well as circular and low-$CO_2$ products.

**Guide to assessing product sustainability** is a white paper that clarifies global eco-label standards and how to interpret environmental declarations.

Learn more about Green Premium >

Guide to assess a product's sustainability >

Transparency RoHS/REACh

## Well-being performance

Mercury Free

| | |
|---|---|
| Rohs Exemption Information | Yes |

## Certifications & Standards

| | |
|---|---|
| **Reach Regulation** | REACh Declaration |
| **Eu Rohs Directive** | Pro-active compliance (Product out of EU RoHS legal scope) |
| **China Rohs Regulation** | China RoHS declaration |
| **Environmental Disclosure** | Product Environmental Profile |
| **Circularity Profile** | End of Life Information |

Dimensions Drawings

**Width 17.5 mm**

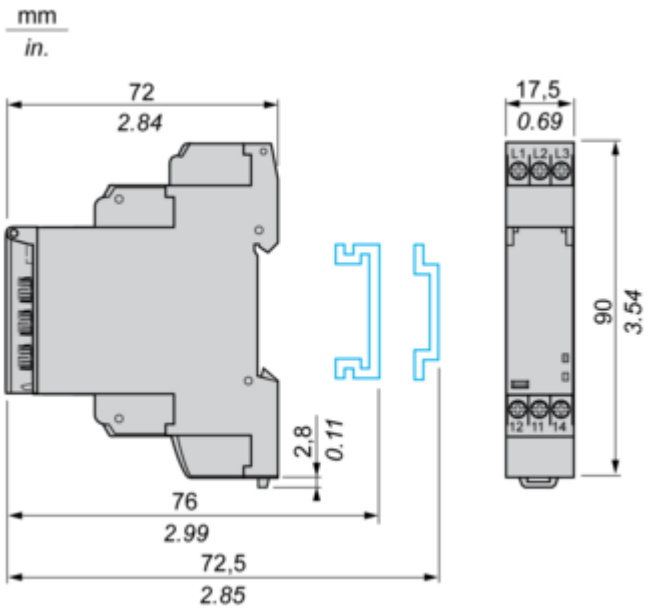

Connections and Schema

**Internal Wiring Diagram**

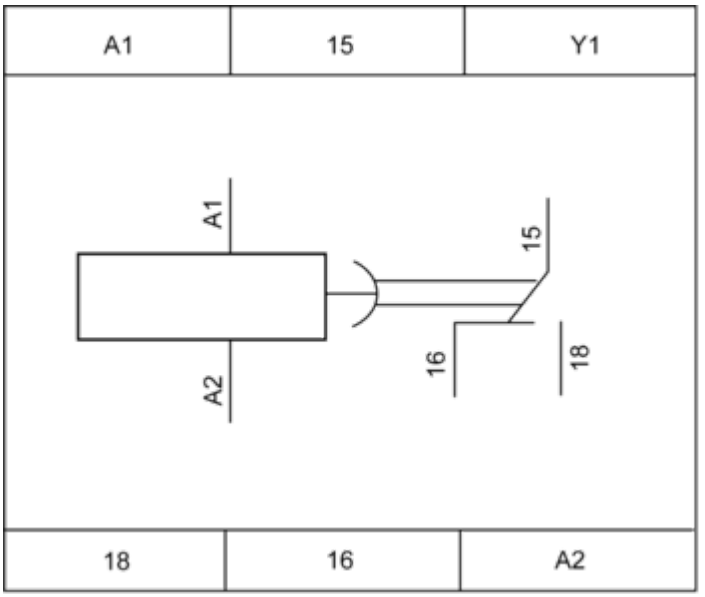

## Wiring Diagram

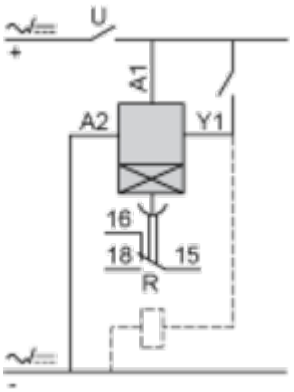

Technical Description

## Function H : Interval Relay

### Description

On energisation of the relay, timing period T starts and the output(s) R close(s). At the end of the timing period T, the output(s) R revert(s) to its/their initial state. The second output can be either timed or instantaneous.

### Function: 1 Output

### Function: 2 Outputs

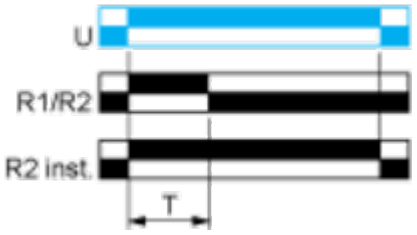


2 timed outputs (R1/R2) or 1 timed output (R1) and 1 instantaneous output (R2 inst.)

## Function Ht: Interval Relay & With Pause / Summation Control

### Description

On energisation of power supply, output(s) R close(s) and timing period T starts.
The timing can be interrupted / paused each time X1 energizes.
When the cumulative total of time periods elapsed reaches the pre-set value T, the output(s) R revert(s) to its/their initial state Reenergization of X1 will also cause output(s) R close(s) if the time has elapsed and restart the same operation as described at the beginning.
Except for RE17*, RE22R2MMW, RENF22R2MMW, RE22R2MMU and RE22R2MJU, timing can be interrupted / paused each time Y1 energizes.
The second output (R2) can be either timed (when set to “TIMED” or instantaneous (when set to “INST”).

### Function: 1 Output

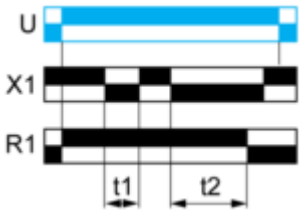


T = t1 + t2 +...

### Function: 2 Outputs

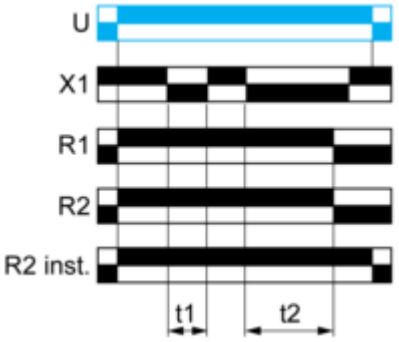


T = t1 + t2 +...

### Function: 1 Output with Retrigger / Restart Control

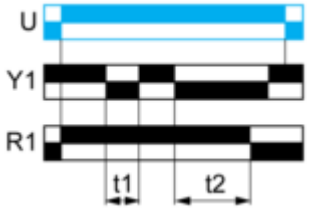


T = t1 + t2 +...

### Function: 2 Outputs with Retrigger / Restart Control

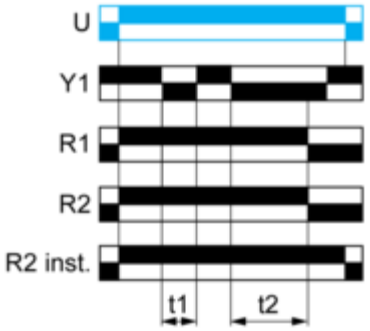


T = t1 + t2 +...

## Legend

Relay de-energised
Relay energised
Output open
Output closed

| | |
|---|---|
| C | Control contact |
| G | Gate |
| R | Relay or solid state output |
| R1/R2 | 2 timed outputs |
| R2 inst. | The second output is instantaneous if the right position is selected |
| T | Timing period |
| Ta - | Adjustable On-delay |
| Tr - | Adjustable Off-delay |
| U | Supply |