Product datasheet

Specifications

Green Premium™

Modular timing relay, 8 A, 1 CO, 1 s..100 h, on delay, 24...240 V AC

Local distributor code:

397857212 RE17RAMU

EAN Code: 3606480552670

Main

Range Of Product	Harmony Timer Relays
Product Or Component Type	Dual function relay
Discrete Output Type	Relay
Width	17.5 mm
Device Short Name	RE17R
Time Delay Type	Power on-delay
Time Delay Range	1...10 min 10...100 h 0.1...1 s 6...60 s 6...60 min 1...10 s 1...10 h
Nominal Output Current	8 A

Complementary

Contacts Type And Composition	1 C/O
Contacts Material	Cadmium free
Height	90 mm
Depth	72 mm
Control Type	Selector switch front panel
[Us] Rated Supply Voltage	24...240 V AC 50/60 Hz 24 V DC
Voltage Range	0.85...1.1 Us
Supply Frequency	50...60 Hz +/- 5 %
Release Of Input Voltage	10 V
Connections - Terminals	Screw terminals, 1 x 0.5...1 x 3.3 mm² (AWG 20...AWG 12) solid without cable end Screw terminals, 2 x 0.5...2 x 2.5 mm² (AWG 20...AWG 14) solid without cable end Screw terminals, 1 x 0.2...1 x 2.5 mm² (AWG 24...AWG 14) flexible with cable end Screw terminals, 2 x 0.2...2 x 1.5 mm² (AWG 24...AWG 16) flexible with cable end
Tightening Torque	0.6…1 N.m conforming to IEC 60947-1
Housing Material	Self-extinguishing
Repeat Accuracy	+/- 0.5 % conforming to IEC 61812-1
Temperature Drift	+/- 0.05 %/°C
Voltage Drift	+/- 0.2 %/V
Setting Accuracy Of Time Delay	+/- 10 % of full scale at 25 °C conforming to IEC 61812-1

Disclaimer: This documentation is not intended as a substitute for and is not to be used for determining suitability or reliability of these products for specific user applications

Control Signal Pulse Width	100 ms with load in parallel typical 30 ms typical
Insulation Resistance	100 MOhm at 500 V DC conforming to IEC 60664-1
Reset Time	120 ms on de-energisation typical
On-Load Factor	100 %
Power Consumption In Va	0…32 VA at 240 V AC
Maximum Power Consumption In W	0.6 W at 24 V DC
Minimum Switching Current	10 mA at 5 V DC
Maximum Switching Current	8 A AC/DC
Maximum Switching Voltage	250 V AC
Breaking Capacity	2000 VA
Operating Frequency	10 Hz
Electrical Durability	100000 cycles (8 A at 250 V AC maximum) for resistive load
Mechanical Durability	10000000 cycles
Dielectric Strength	2.5 kV 1 mA/1 minute 50 Hz conforming to IEC 61812-1
[Uimp] Rated Impulse Withstand Voltage	5 kV during 1.2/50 µs
Power On Delay	100 ms
Marking	CE
Creepage Distance	4 kV/3 conforming to IEC 60664-1
Safety Reliability Data	B10d = 270000 MTTFd = 296.8 years
Mounting Position	Any position in relation to normal vertical mounting plane
Mounting Support	35 mm DIN rail conforming to IEC 60715
Local Signalling	LED indicator for on steady: relay energised, no timing in progress LED indicator for flashing: timing in progress 80 % ON and 20 % OFF LED indicator for pulsing: relay de-energised, no timing in progress (except function Di-D, Li-L) 5 % ON and 95 % OFF
Net Weight	0.07 kg
Number Of Functions	2
Time Delay Type	A, At
Functionality	On-delay timing
Compatibility Code	RE17

Environment

Immunity To Microbreaks	20 ms
Standards	2006/95/EC 2004/108/EC IEC 61812-1 IEC 61000-6-3 IEC 61000-6-1 IEC 61000-6-4 IEC 61000-6-2
Product Certifications	CSA cULus GL
Ambient Air Temperature For Storage	-30…60 °C
Ambient Air Temperature For Operation	-20…60 °C

Ip Degree Of Protection	IP20 (terminal block) conforming to IEC 60529 IP40 (housing) conforming to IEC 60529 IP50 (front panel) conforming to IEC 60529
Vibration Resistance	20 m/s² (f= 10…150 Hz) conforming to IEC 60068-2-6
Shock Resistance	15 gn for 11 ms conforming to IEC 60068-2-27
Relative Humidity	93 % without condensation conforming to IEC 60068-2-30
Electromagnetic Compatibility	Electrostatic discharge immunity test: (in contact), level 3, 6 kV, conforming to IEC 61000-4-2 Electrostatic discharge immunity test: (in air), level 3, 8 kV, conforming to IEC 61000-4-2 Susceptibility to electromagnetic fields: (80 MHz to 1 GHz), level 3, 10 V/m, conforming to IEC 61000-4-3 Electrical fast transient/burst immunity test: (capacitive connecting clip), level 3, 1 kV, conforming to IEC 61000-4-4 Electrical fast transient/burst immunity test: (direct), level 3, 2 kV, conforming to IEC 61000-4-4 1.2/50 µs shock waves immunity test: (differential mode), level 3, 1 kV, conforming to IEC 61000-4-5 1.2/50 µs shock waves immunity test: (common mode), level 3, 2 kV, conforming to IEC 61000-4-5 Conducted RF disturbances: (0.15...80 MHz), level 3, 10 V, conforming to IEC 61000-4-6 Voltage dips and interruptions immunity test: (1 cycle), 0 %, conforming to IEC 61000-4-11 Voltage dips and interruptions immunity test: (25/30 cycles), 70 %, conforming to IEC 61000-4-11 Conducted and radiated emissions: , class B, conforming to EN 55022

Packing Units

Unit Type Of Package 1	PCE
Number Of Units In Package 1	1
Package 1 Height	2.700 cm
Package 1 Width	7.800 cm
Package 1 Length	9.500 cm
Package 1 Weight	77.000 g
Unit Type Of Package 2	S02
Number Of Units In Package 2	40
Package 2 Height	15.000 cm
Package 2 Width	30.000 cm
Package 2 Length	40.000 cm
Package 2 Weight	3.700 kg
Unit Type Of Package 3	P06
Number Of Units In Package 3	640
Package 3 Height	75.000 cm
Package 3 Width	60.000 cm
Package 3 Length	80.000 cm
Package 3 Weight	65.060 kg

Contractual warranty

Warranty	18 months

Sustainability

Green Premium™ label is Schneider Electric's commitment to delivering products with best-in-class environmental performance. Green Premium promises compliance with the latest regulations, transparency on environmental impacts, as well as circular and low-CO_2 products.

Guide to assessing product sustainability is a white paper that clarifies global eco-label standards and how to interpret environmental declarations.

Learn more about Green Premium >

Guide to assess a product's sustainability >

Transparency RoHS/REACh

Well-being performance

Mercury Free

Rohs Exemption Information	Yes

Certifications & Standards

Reach Regulation	REACh Declaration
Eu Rohs Directive	Pro-active compliance (Product out of EU RoHS legal scope)
China Rohs Regulation	China RoHS declaration
Environmental Disclosure	Product Environmental Profile
Weee	The product must be disposed on European Union markets following specific waste collection and never end up in rubbish bins
Circularity Profile	End of Life Information

Dimensions Drawings

Width 17.5 mm

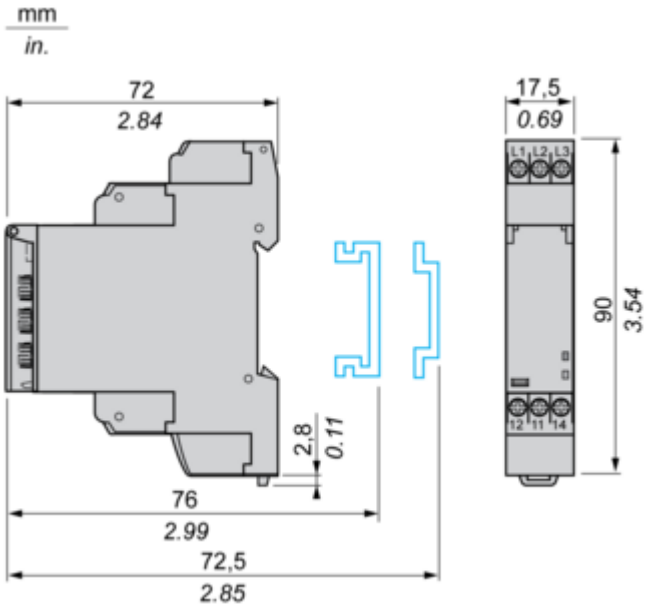

Connections and Schema

Internal Wiring Diagram

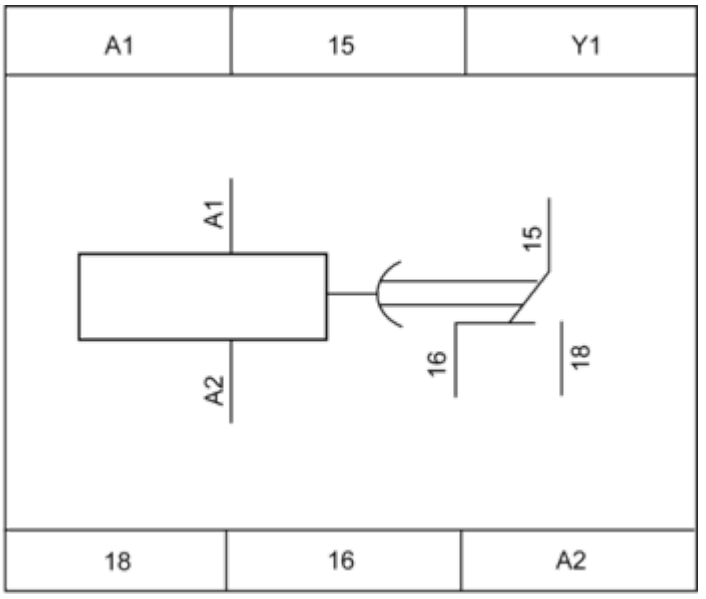

Wiring Diagram

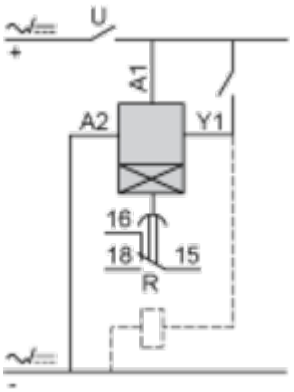

Technical Description

Function A : Power on Delay Relay

Description

The timing period T begins on energisation. After timing, the output(s) R close(s). The second output can be either timed or instantaneous.

Function: 1 Output

Function: 2 Outputs

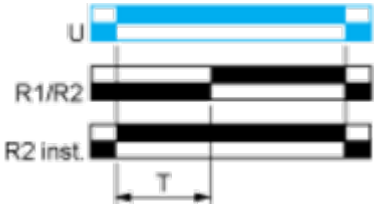

2 timed outputs (R1/R2) or 1 timed output (R1) and 1 instantaneous output (R2 inst.)

Function At : Power on Delay Relay (Summation) with Control Signal

Description

After power-up, the first opening of control contact C starts the timing. Timing can be interrupted each time control contact closes. When the cumulative total of time periods elapsed reaches the pre-set value T, the output relay closes.

Function: 1 Output

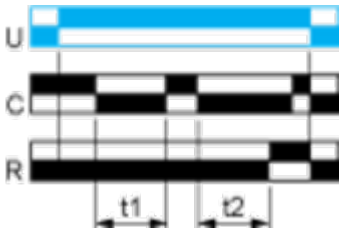

T = t1 + t2 +...

Legend

Relay de-energised
Relay energised
Output open
Output closed

C	Control contact
G	Gate
R	Relay or solid state output
R1/R2	2 timed outputs
R2 inst.	The second output is instantaneous if the right position is selected
T	Timing period
Ta -	Adjustable On-delay
Tr -	Adjustable Off-delay
U	Supply