Product datasheet

Specifications

asymmetrical flashing relay - 0.1..100 h - 24..240 VAC - solid state output

Local distributor code:

397857173 RE17LLBM

EAN Code: 3606480552656

Main

Range Of Product	Harmony Timer Relays
Product Or Component Type	Dual function relay
Discrete Output Type	Solid state
Width	17.5 mm
Component Name	RE17L
Time Delay Type	Asymmetrical flashing
Time Delay Range	6...60 s 6...60 min 1...10 min 0.1...1 s 1...10 h 10...100 h 1...10 s
Nominal Output Current	0.7 A

Complementary

Control Type	Selector switch front panel
[Us] Rated Supply Voltage	24...240 V AC 50/60 Hz
Voltage Range	0.85...1.1 Us
Supply Frequency	50...60 Hz +/- 5 %
Release Of Input Voltage	7 V
Control Signal Pulse Width	0.05 s typical
Insulation Resistance	100 MOhm at 500 V DC conforming to IEC 60664-1
[Uimp] Rated Impulse Withstand Voltage	5 kV during 1.2/50 µs
Power On Delay	100 ms
Connections - Terminals	Screw terminals, 1 x 0.5...1 x 3.3 mm² (AWG 20...AWG 12) solid without cable end Screw terminals, 2 x 0.5...2 x 2.5 mm² (AWG 20...AWG 14) solid without cable end Screw terminals, 1 x 0.2...1 x 2.5 mm² (AWG 24...AWG 14) flexible with cable end Screw terminals, 2 x 0.2...2 x 1.5 mm² (AWG 24...AWG 16) flexible with cable end
Tightening Torque	0.6…1 N.m conforming to IEC 60947-1
Dielectric Strength	2.5 kV 1 mA/1 minute 50 Hz conforming to IEC 61812-1
Housing Material	Self-extinguishing
Repeat Accuracy	+/- 0.5 % conforming to IEC 61812-1
Temperature Drift	+/- 0.05 %/°C
Voltage Drift	+/- 0.2 %/V

Disclaimer: This documentation is not intended as a substitute for and is not to be used for determining suitability or reliability of these products for specific user applications

Setting Accuracy Of Time Delay	+/- 10 % of full scale at 25 °C conforming to IEC 61812-1
Reset Time	350 ms on de-energisation typical
On-Load Factor	100 %
Power Consumption In Va	0…3 VA at 240 V AC
Breaking Capacity	0.5 A AC conforming to UL 0.7 A AC at 20 °C
Operating Frequency	10 Hz
Maximum Output Current	20 A
Minimum Switching Current	10 mA
Maximum Leakage Current	5 mA
Maximum Switching Voltage	250 V AC
Maximum Voltage Drop	<4 V 3-wire <8 V 2-wire
Electrical Durability	100000000 cycles
Marking	CE
Creepage Distance	4 kV/3 conforming to IEC 60664-1
Safety Reliability Data	B10d = 320000 MTTFd = 353.8 years
Mounting Position	Any position in relation to normal vertical mounting plane
Mounting Support	35 mm DIN rail conforming to IEC 60715
Net Weight	0.068 kg
Time Delay Type	L, Li
Functionality	Asymmetrical flashing timer
Number Of Functions	2
Compatibility Code	RE17

Environment

Immunity To Microbreaks	20 ms
Derating Factor	5 mA/°C
Standards	IEC 61000-6-2 IEC 61000-6-4 IEC 61812-1 IEC 61000-6-1 IEC 61000-6-3 2006/95/EC 2004/108/EC
Product Certifications	cULus GL CSA
Ambient Air Temperature For Storage	-30…60 °C
Ambient Air Temperature For Operation	-20…60 °C
Ip Degree Of Protection	IP20 (terminal block) conforming to IEC 60529 IP40 (housing) conforming to IEC 60529 IP50 (front panel) conforming to IEC 60529
Vibration Resistance	20 m/s² (f= 10…150 Hz) conforming to IEC 60068-2-6
Shock Resistance	15 gn for 11 ms conforming to IEC 60068-2-27
Relative Humidity	93 % without condensation conforming to IEC 60068-2-30

Electromagnetic Compatibility	Electrostatic discharge immunity test: (in contact), level 3, 6 kV, conforming to IEC 61000-4-2 Electrostatic discharge immunity test: (in air), level 3, 8 kV, conforming to IEC 61000-4-2 Susceptibility to electromagnetic fields: (80 MHz to 1 GHz), level 3, 10 V/m, conforming to IEC 61000-4-3 Electrical fast transient/burst immunity test: (capacitive connecting clip), level 3, 1 kV, conforming to IEC 61000-4-4 Electrical fast transient/burst immunity test: (direct), level 3, 2 kV, conforming to IEC 61000-4-4 1.2/50 µs shock waves immunity test: (differential mode), level 3, 1 kV, conforming to IEC 61000-4-5 1.2/50 µs shock waves immunity test: (common mode), level 3, 2 kV, conforming to IEC 61000-4-5 Conducted RF disturbances: (0.15...80 MHz), level 3, 10 V, conforming to IEC 61000-4-6 Voltage dips and interruptions immunity test: (1 cycle), 0 %, conforming to IEC 61000-4-11 Voltage dips and interruptions immunity test: (25/30 cycles), 70 %, conforming to IEC 61000-4-11 Conducted and radiated emissions: , class B, conforming to EN 55022

Packing Units

Unit Type Of Package 1	PCE
Number Of Units In Package 1	1
Package 1 Height	2.7 cm
Package 1 Width	8.0 cm
Package 1 Length	9.5 cm
Package 1 Weight	73.0 g
Unit Type Of Package 2	S02
Number Of Units In Package 2	40
Package 2 Height	15.0 cm
Package 2 Width	30.0 cm
Package 2 Length	40.0 cm
Package 2 Weight	3.347 kg

Contractual warranty

Warranty	18 months

Sustainability

Green Premium™ label is Schneider Electric's commitment to delivering products with best-in-class environmental performance. Green Premium promises compliance with the latest regulations, transparency on environmental impacts, as well as circular and low-CO_2 products.

Guide to assessing product sustainability is a white paper that clarifies global eco-label standards and how to interpret environmental declarations.

Learn more about Green Premium >

Guide to assess a product's sustainability >

Transparency RoHS/REACh

Well-being performance

Mercury Free

Rohs Exemption Information	Yes

Certifications & Standards

Reach Regulation	REACh Declaration
Eu Rohs Directive	Pro-active compliance (Product out of EU RoHS legal scope)
China Rohs Regulation	China RoHS declaration
Environmental Disclosure	Product Environmental Profile
Circularity Profile	End of Life Information

Dimensions Drawings

Width 17.5 mm

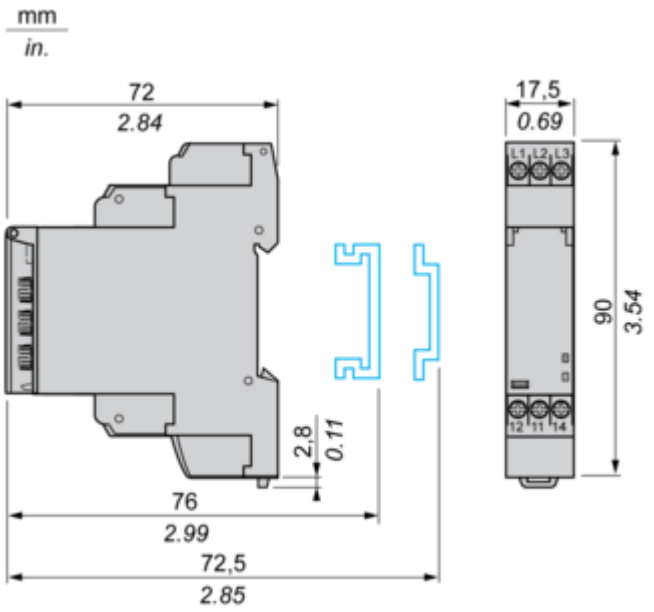

Connections and Schema

Internal Wiring Diagram

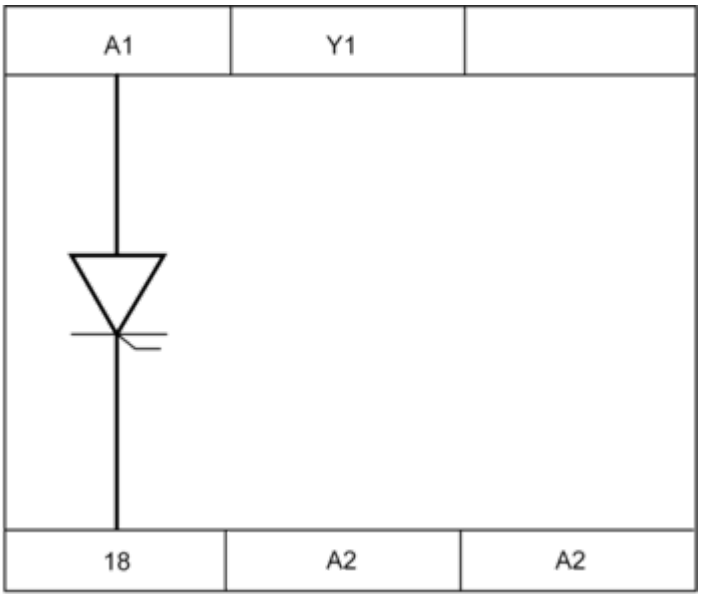

Wiring Diagram

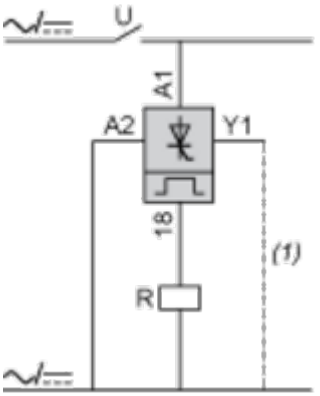

1 Link A2-Y1 for function L only.

Technical Description

Function L : Asymmetrical Flasher Relay (Starting Pulse Off)

Description

Repetitive cycle comprises of two, independently adjustable timing periods Ta and Tr. Each timing period corresponds to a different state of the output R.

Function: 1 Output

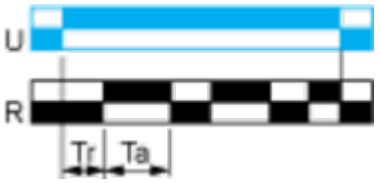

Function Li : Asymmetrical Flasher Relay (Starting Pulse On)

Description

Repetitive cycle comprises of two, independently adjustable timing periods Ta and Tr. Each timing period corresponds to a different state of the output R.

Function: 1 Output

Legend

Relay de-energised
Relay energised
Output open
Output closed

C	Control contact
G	Gate
R	Relay or solid state output
R1/R2	2 timed outputs
R2 inst.	The second output is instantaneous if the right position is selected
T	Timing period
Ta -	Adjustable On-delay
Tr -	Adjustable Off-delay
U	Supply