Product datasheet

Specifications

Green Premium™

TeSys D reversing contactor - 3P(3 NO) - AC-3 - <= 440 V 40 A - 115 V AC coil

Local distributor code:

393512894 LC2D40AFE7

EAN Code: 3389119409506

Main

Range	TeSys TeSys Deca
Product Name	TeSys Deca
Product Or Component Type	Reversing contactor
Device Short Name	LC2D
Contactor Application	Motor control Resistive load
Utilisation Category	AC-1 AC-3 AC-3e
Device Presentation	Preassembled with reversing power busbar
Poles Description	3P
Power Pole Contact Composition	3 NO
[Ue] Rated Operational Voltage	Power circuit: <= 690 V AC 25...400 Hz Power circuit: <= 300 V DC
[Ie] Rated Operational Current	40 A (at <60 °C) at <= 440 V AC AC-3 for power circuit 60 A (at <60 °C) at <= 440 V AC AC-1 for power circuit 40 A (at <60 °C) at <= 440 V AC AC-3e for power circuit
Motor Power Kw	11 kW at 220...230 V AC 50...60 Hz 18.5 kW at 380...400 V AC 50...60 Hz 22 kW at 415 V AC 50...60 Hz 22 kW at 440 V AC 50...60 Hz 22 kW at 500 V AC 50...60 Hz 30 kW at 660...690 V AC 50...60 Hz
Motor Power Hp (Ul / Csa)	5 hp at 230/240 V AC 60 Hz for 1 phase motors 10 hp at 230/240 V AC 60 Hz for 3 phases motors 30 hp at 575/600 V AC 60 Hz for 3 phases motors 10 hp at 200/208 V AC 60 Hz for 3 phases motors 3 hp at 115 V AC 60 Hz for 1 phase motors 30 hp at 460/480 V AC 60 Hz for 3 phases motors
Control Circuit Type	AC at 50/60 Hz
[Uc] Control Circuit Voltage	115 V AC 50/60 Hz
Auxiliary Contact Composition	1 NO + 1 NC
[Uimp] Rated Impulse Withstand Voltage	6 kV conforming to IEC 60947
Overvoltage Category	III
[Ith] Conventional Free Air Thermal Current	10 A (at 60 °C) for signalling circuit 60 A (at 60 °C) for power circuit
Irms Rated Making Capacity	140 A AC for signalling circuit conforming to IEC 60947-5-1 250 A DC for signalling circuit conforming to IEC 60947-5-1 800 A at 440 V for power circuit conforming to IEC 60947
Rated Breaking Capacity	800 A at 440 V for power circuit conforming to IEC 60947

Disclaimer: This documentation is not intended as a substitute for and is not to be used for determining suitability or reliability of these products for specific user applications

[Icw] Rated Short-Time Withstand Current	72 A 40 °C - 10 min for power circuit 165 A 40 °C - 1 min for power circuit 320 A 40 °C - 10 s for power circuit 720 A 40 °C - 1 s for power circuit 100 A - 1 s for signalling circuit 120 A - 500 ms for signalling circuit 140 A - 100 ms for signalling circuit
Associated Fuse Rating	10 A gG for signalling circuit conforming to IEC 60947-5-1 80 A gG at <= 690 V coordination type 1 for power circuit 80 A gG at <= 690 V coordination type 2 for power circuit
Average Impedance	1.5 mOhm - Ith 60 A 50 Hz for power circuit
[Ui] Rated Insulation Voltage	Power circuit: 690 V conforming to IEC 60947-4-1 Power circuit: 600 V CSA certified Power circuit: 600 V UL certified Signalling circuit: 690 V conforming to IEC 60947-1 Signalling circuit: 600 V CSA certified Signalling circuit: 600 V UL certified
Electrical Durability	1.5 Mcycles 40 A AC-3 at Ue <= 440 V 1.4 Mcycles 60 A AC-1 at Ue <= 440 V 1.5 Mcycles 40 A AC-3e at Ue <= 440 V
Power Dissipation Per Pole	2.4 W AC-3 5.4 W AC-1 2.4 W AC-3e
Front Cover	With
Interlocking Type	Mechanical
Mounting Support	Rail Plate
Standards	CSA C22.2 No 14 EN 60947-4-1 EN 60947-5-1 IEC 60947-4-1 IEC 60947-5-1 UL 508 IEC 60335-1
Product Certifications	UL CSA RINA GOST CCC DNV LROS (Lloyds register of shipping) GL BV UKCA
Connections - Terminals	Control circuit: screw clamp terminals 1 cable(s) 1…4 mm²flexible without cable end Control circuit: screw clamp terminals 2 cable(s) 1…4 mm²flexible without cable end Control circuit: screw clamp terminals 1 cable(s) 1…4 mm²flexible with cable end Control circuit: screw clamp terminals 2 cable(s) 1…2.5 mm²flexible with cable end Control circuit: screw clamp terminals 1 cable(s) 1…4 mm²solid Control circuit: screw clamp terminals 2 cable(s) 1…4 mm²solid Power circuit: EverLink BTR screw connectors 1 cable(s) 1…35 mm²flexible without cable end Power circuit: EverLink BTR screw connectors 2 cable(s) 1…25 mm²flexible without cable end Power circuit: EverLink BTR screw connectors 1 cable(s) 1…35 mm²flexible with cable end Power circuit: EverLink BTR screw connectors 2 cable(s) 1…25 mm²flexible with cable end Power circuit: EverLink BTR screw connectors 1 cable(s) 1…35 mm²solid Power circuit: EverLink BTR screw connectors 2 cable(s) 1…25 mm²solid
Tightening Torque	Control circuit: 1.7 N.m - on screw clamp terminals - with screwdriver flat Ø 6 mm Control circuit: 1.7 N.m - on screw clamp terminals - with screwdriver Philips No 2 Power circuit: 8 N.m - on EverLink BTR screw connectors - cable 25…35 mm² hexagonal screw head 4 mm Power circuit: 5 N.m - on EverLink BTR screw connectors - cable 1…25 mm² hexagonal screw head 4 mm Control circuit: 1.7 N.m - on screw clamp terminals - with screwdriver pozidriv No 2 Power circuit: 2.5 N.m - on screw clamp terminals - with screwdriver pozidriv No 2

Operating Time	4...19 ms opening 12...26 ms closing
Safety Reliability Level	B10d = 1369863 cycles contactor with nominal load conforming to EN/ISO 13849-1 B10d = 20000000 cycles contactor with mechanical load conforming to EN/ISO 13849-1
Mechanical Durability	6 Mcycles
Maximum Operating Rate	3600 cyc/h 60 °C

Complementary

Coil Technology	Without built-in suppressor module
Control Circuit Voltage Limits	0.3...0.6 Uc (-40…70 °C):drop-out AC 50/60 Hz 0.8...1.1 Uc (-40…60 °C):operational AC 50 Hz 0.85...1.1 Uc (-40…60 °C):operational AC 60 Hz 1...1.1 Uc (60…70 °C):operational AC 50/60 Hz
Inrush Power In Va	140 VA 60 Hz cos phi 0.75 (at 20 °C) 160 VA 50 Hz cos phi 0.75 (at 20 °C)
Hold-In Power Consumption In Va	13 VA 60 Hz cos phi 0.3 (at 20 °C) 15 VA 50 Hz cos phi 0.3 (at 20 °C)
Heat Dissipation	4…5 W at 50/60 Hz
Auxiliary Contacts Type	type mechanically linked 1 NO + 1 NC conforming to IEC 60947-5-1 type mirror contact 1 NC conforming to IEC 60947-4-1
Signalling Circuit Frequency	25...400 Hz
Minimum Switching Current	5 mA for signalling circuit
Minimum Switching Voltage	17 V for signalling circuit
Non-Overlap Time	1.5 ms on de-energisation between NC and NO contact 1.5 ms on energisation between NC and NO contact
Insulation Resistance	> 10 MOhm for signalling circuit

Environment

Ip Degree Of Protection	IP20 front face conforming to IEC 60529
Climatic Withstand	conforming to IACS E10 conforming to IEC 60947-1 Annex Q category D
Protective Treatment	TH conforming to IEC 60068-2-30
Pollution Degree	3
Ambient Air Temperature For Operation	-40…60 °C 60…70 °C with derating
Ambient Air Temperature For Storage	-60…80 °C
Operating Altitude	0...3000 m
Fire Resistance	850 °C conforming to IEC 60695-2-1
Flame Retardance	V1 conforming to UL 94
Mechanical Robustness	Vibrations contactor open: 2 Gn, 5...300 Hz Vibrations contactor closed: 4 Gn, 5...300 Hz Shocks contactor open: 10 Gn for 11 ms Shocks contactor closed: 15 Gn for 11 ms
Height	122 mm
Width	119 mm
Depth	120 mm
Net Weight	1.87 kg

Packing Units

Unit Type Of Package 1	PCE
Number Of Units In Package 1	1
Package 1 Height	14.000 cm
Package 1 Width	16.200 cm
Package 1 Length	19.500 cm
Package 1 Weight	2.070 kg
Unit Type Of Package 2	S03
Number Of Units In Package 2	4
Package 2 Height	30.000 cm
Package 2 Width	30.000 cm
Package 2 Length	40.000 cm
Package 2 Weight	8.747 kg

Contractual warranty

Warranty	18 months

Sustainability

Green Premium™ label is Schneider Electric's commitment to delivering products with best-in-class environmental performance. Green Premium promises compliance with the latest regulations, transparency on environmental impacts, as well as circular and low-CO_2 products.

Guide to assessing product sustainability is a white paper that clarifies global eco-label standards and how to interpret environmental declarations.

Learn more about Green Premium >

Guide to assess a product's sustainability >

Transparency RoHS/REACh

Well-being performance

Reach Free Of Svhc	
Rohs Exemption Information	Yes
Pvc Free	

Certifications & Standards

Reach Regulation	REACh Declaration
Eu Rohs Directive	Compliant EU RoHS Declaration
China Rohs Regulation	China RoHS declaration Pro-active China RoHS declaration (out of China RoHS legal scope)
Environmental Disclosure	Product Environmental Profile
Weee	The product must be disposed on European Union markets following specific waste collection and never end up in rubbish bins
Circularity Profile	End of Life Information

Dimensions Drawings

Dimensions

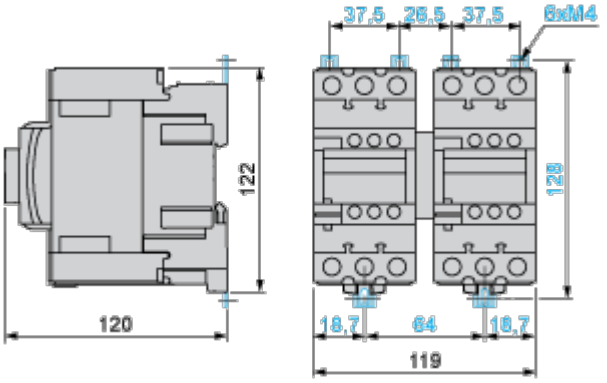

Connections and Schema
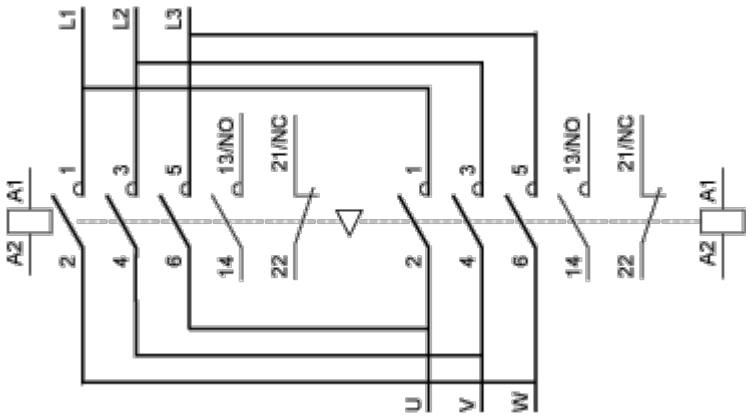
Wiring