Product datasheet

Specifications

Green Premium™

Cable duct support kit, Canalis KBA, 25/40A, cable duct support with intermediate support

KBA40ZFG2

EAN Code: 3606480000607

Discontinued

Main

Range Of Product	Canalis
Product Or Component Type	Support
Product Compatibility	KBA
Quantity Per Set	Set of 10

Complementary

Accessory / Separate Part Category	Adaptation
Mounting Location	On trunking
Mounting Mode	By clips
Mounting Support	Busbar
Width	25 mm
Depth	30 mm
Height	97.5 mm
Net Weight	0.2 kg

Environment

Standards	IEC 61439-6 IEC 60439-2

Packing Units

Unit Type Of Package 1	PCE
Number Of Units In Package 1	1
Package 1 Height	2.000 cm
Package 1 Width	3.700 cm
Package 1 Length	9.800 cm
Package 1 Weight	26.000 g
Unit Type Of Package 2	BB1
Number Of Units In Package 2	10
Package 2 Height	8.000 cm
Package 2 Width	15.000 cm
Package 2 Length	24.000 cm

Disclaimer: This documentation is not intended as a substitute for and is not to be used for determining suitability or reliability of these products for specific user applications

Package 2 Weight	760.000 g
Unit Type Of Package 3	CAR
Number Of Units In Package 3	100
Package 3 Height	29.500 cm
Package 3 Width	29.500 cm
Package 3 Length	39.500 cm
Package 3 Weight	8.000 kg

Contractual warranty

Warranty	18 months

Sustainability

Green Premium™ label is Schneider Electric's commitment to delivering products with best-in-class environmental performance. Green Premium promises compliance with the latest regulations, transparency on environmental impacts, as well as circular and low-CO_2 products.

Guide to assessing product sustainability is a white paper that clarifies global eco-label standards and how to interpret environmental declarations.

Learn more about Green Premium >

Guide to assess a product's sustainability >

Transparency RoHS/REACh

Well-being performance

Reach Free Of Svhc	
Toxic Heavy Metal Free	
Mercury Free	
Rohs Exemption Information	Yes
Pvc Free	
Halogen Free Product	

Certifications & Standards

Reach Regulation	REACh Declaration
Eu Rohs Directive	Compliant EU RoHS Declaration
China Rohs Regulation	China RoHS declaration Pro-active China RoHS declaration (out of China RoHS legal scope)
Environmental Disclosure	Product Environmental Profile
Weee	The product must be disposed on European Union markets following specific waste collection and never end up in rubbish bins
Circularity Profile	No need of specific recycling operations
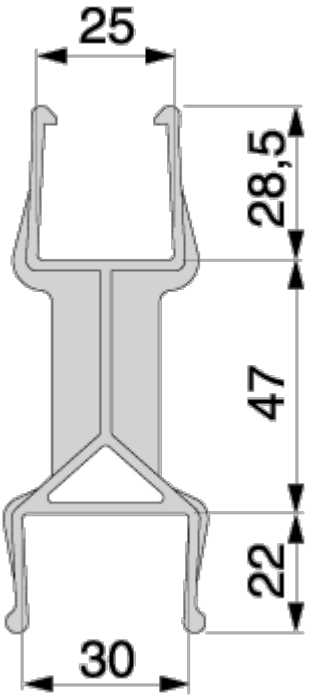
Dimension Drawings