# Product datasheet

Specifications

Green Premium™

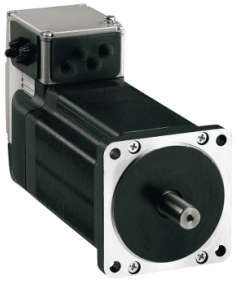

## integrated drive ILS with stepper motor - 24..48 V - EtherNet/IP - 5 A

ILS2K853PB1F0

Discontinued on: 9 Feb 2023

Discontinued

**EAN Code: 3606485205021**

## Main

| | |
|---|---|
| **Range Of Product** | Lexium integrated drive |
| **Product Or Component Type** | Motion integrated drive |
| **Device Short Name** | ILS |
| **Motor Type** | 3-phase stepper motor |
| **Number Of Motor Poles** | 6 |
| **Network Number Of Phases** | Single phase |
| **[Us] Rated Supply Voltage** | 24 V<br>48 V |
| **Network Type** | DC |
| **Communication Interface** | Ethernet/IP, integrated |
| **Length** | 247.3 mm |
| **Winding Type** | Medium speed of rotation and medium torque |
| **Electrical Connection** | Printed circuit board connector |
| **Holding Brake** | With |
| **Gear Box Type** | Without |
| **Nominal Speed** | 100 rpm at 24 V<br>200 rpm at 48 V |
| **Nominal Torque** | 6 N.m |
| **Holding Torque** | 6 N.m holding brake<br>6 N.m |

## Complementary

| | |
|---|---|
| **Transmission Rate** | 125, 250, 500 kbauds |
| **Mounting Support** | Flange |
| **Motor Flange Size** | 85 mm |
| **Number Of Motor Stacks** | 3 |
| **Centring Collar Diameter** | 60 mm |
| **Centring Collar Depth** | 2 mm |
| **Number Of Mounting Holes** | 4 |
| **Mounting Holes Diameter** | 6.5 mm |
| **Circle Diameter Of The Mounting Holes** | 99 mm |

Disclaimer: This documentation is not intended as a substitute for and is not to be used for determining suitability or reliability of these products for specific user applications

| | |
|---|---|
| **Feedback Type** | Index pulse |
| **Shaft End** | Untapped |
| **Second Shaft** | Without second shaft end |
| **Shaft Diameter** | 14 mm |
| **Shaft Length** | 30 mm |
| **Supply Voltage Limits** | 18…55 V |
| **Current Consumption** | 5000 mA maximum continuous |
| **Associated Fuse Rating** | 16 A |
| **Commissioning Interface** | RS485 Modbus TCP (9.6, 19.2 and 38.4 kbauds) |
| **Input/Output Type** | 4 signals (each be used as input or output) |
| **Voltage State 0 Guaranteed** | -3...4.5 V |
| **Voltage State 1 Guaranteed** | 15...30 V |
| **Discrete Input Current** | 10 mA at 24 V for safety input<br>2 mA at 24 V for 24 V signal interface |
| **Discrete Output Voltage** | 23...25 V |
| **Maximum Switching Current** | 100 mA per output<br>200 mA total |
| **Protection Type** | Safe torque off<br>Short circuit of the output voltage<br>Overload of output voltage |
| **Peak Stall Torque** | 6 N.m |
| **Continuous Stall Torque** | 6 N.m |
| **Speed Feedback Resolution** | 20000 points/turn |
| **Accuracy Error** | +/- 6 arc min |
| **Rotor Inertia** | 3.5 kg.cm² |
| **Maximum Mechanical Speed** | 2000 rpm |
| **Maximum Radial Force Fr** | 110 N |
| **Maximum Axial Force Fa** | 170 N (tensile force)<br>30 N (force pressure) |
| **Service Life In Hours** | 20000 h bearing |
| **Brake Pull-In Power** | 22 W |
| **Brake Release Time** | 40 ms |
| **Brake Application Time** | 20 ms |
| **Marking** | CE |
| **Type Of Cooling** | Natural convection |
| **Net Weight** | 6.5 kg |

## Environment

| | |
|---|---|
| **Standards** | IEC 61800-3<br>IEC 61800-3, Ed 2<br>IEC 60072-1<br>EN 61800-3:2001, second environment<br>IEC 50178<br>EN 61800-3 : 2001-02<br>IEC 50347 |

| | |
|---|---|
| **Product Certifications** | TÜV<br>cUL<br>UL |
| **Ambient Air Temperature For Operation** | 40…55 °C (with power derating of 2 % per °C)<br>0…40 °C (without derating) |
| **Permissible Ambient Air Temperature Around The Device** | 105 °C power amplifier<br>110 °C motor |
| **Ambient Air Temperature For Storage** | -25…70 °C |
| **Operating Altitude** | <= 1000 m without derating |
| **Relative Humidity** | 15…85 % without condensation |
| **Vibration Resistance** | 20 m/s² (f= 10…500 Hz) 10 cycles conforming to IEC 60068-2-6 |
| **Shock Resistance** | 150 m/s² 1000 shocks conforming to IEC 60068-2-29 |
| **Ip Degree Of Protection** | IP41 shaft bushing: conforming to IEC 60034-5<br>IP54 total except shaft bushing: conforming to IEC 60034-5 |

## Packing Units

| | |
|---|---|
| **Unit Type Of Package 1** | PCE |
| **Number Of Units In Package 1** | 1 |
| **Package 1 Height** | 10.4 cm |
| **Package 1 Width** | 18.0 cm |
| **Package 1 Length** | 36.5 cm |
| **Package 1 Weight** | 6.0 kg |

## Contractual warranty

| | |
|---|---|
| **Warranty** | 18 months |

## Sustainability

**Green Premium™ label** is Schneider Electric's commitment to delivering products with best-in-class environmental performance. Green Premium promises compliance with the latest regulations, transparency on environmental impacts, as well as circular and low-$CO_2$ products.

**Guide to assessing product sustainability** is a white paper that clarifies global eco-label standards and how to interpret environmental declarations.

Learn more about Green Premium >

Guide to assess a product's sustainability >

Transparency RoHS/REACh

## Well-being performance

Mercury Free

| | |
|---|---|
| Rohs Exemption Information | Yes |

## Certifications & Standards

| | |
|---|---|
| **Reach Regulation** | REACh Declaration |
| **Eu Rohs Directive** | Pro-active compliance (Product out of EU RoHS legal scope) |
| **China Rohs Regulation** | China RoHS declaration |
| **Environmental Disclosure** | Product Environmental Profile |
| **Weee** | The product must be disposed on European Union markets following specific waste collection and never end up in rubbish bins |
| **Circularity Profile** | End of Life Information |

## Dimensions Drawings

### Integrated Drive with Holding Brake

#### Dimensions

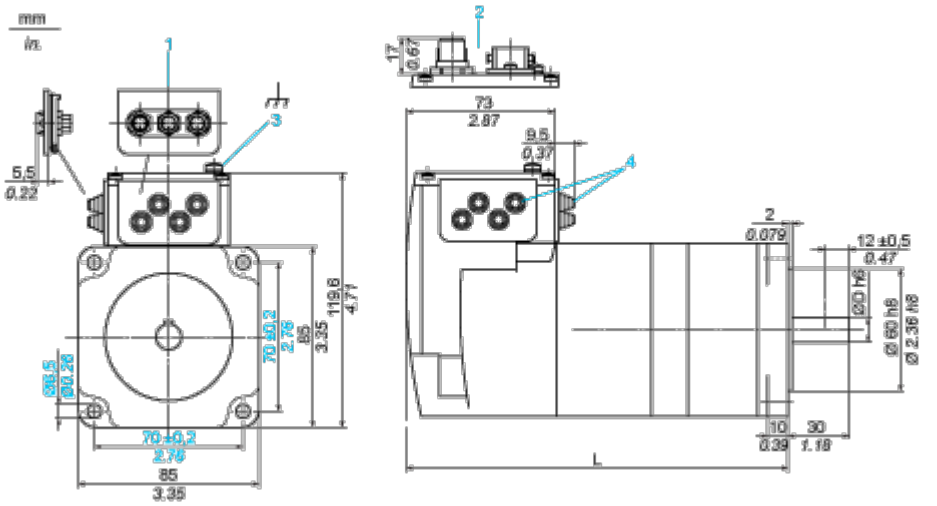


1 Accessories: I/O signal insert with industrial connectors

2 Option: industrial connectors

3 Earth (ground) terminal

4 Accessories: cable entries Ø = 3 ... 9 mm/0.12 ... 0.35 in.

L 247.3 mm/9.74 in.

D 14 mm/0.55 in.

## Connections and Schema

### Connection Example with 4 I/O Signals

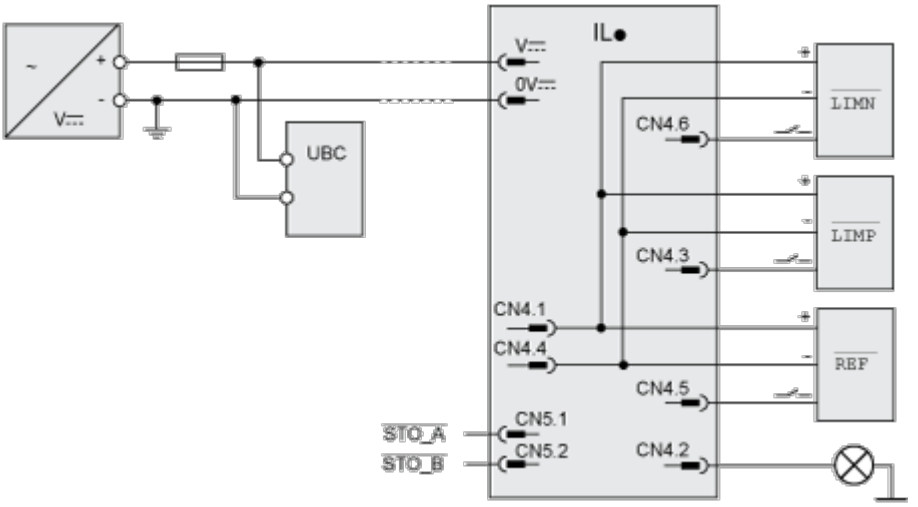

## Performance Curves

### Torque Characteristics

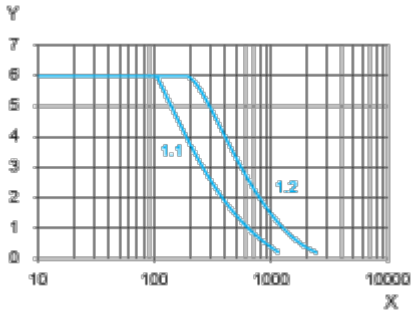


X Speed of rotation in rpm

Y Torque in Nm

1.1 Max. torque at 24 V

1.2 Max. torque at 48 V