Product datasheet

Specifications

Green Premium™

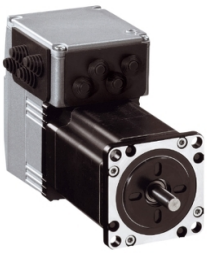

integrated drive ILS with stepper motor - 24..48 V - DeviceNet - 3.5 A

ILS2D571PB1A0

Discontinued on: 15 Jun 2023

To be end-of-service on: 31 Dec 2026

Discontinued - Service only

EAN Code: 3389119227926

Main

Range Of Product	Lexium integrated drive
Product Or Component Type	Motion integrated drive
Device Short Name	ILS
Motor Type	3-phase stepper motor
Number Of Motor Poles	6
Network Number Of Phases	Single phase
[Us] Rated Supply Voltage	24 V 48 V
Network Type	DC
Communication Interface	DeviceNet, integrated
Length	101.9 mm
Winding Type	Medium speed of rotation and medium torque
Electrical Connection	Printed circuit board connector
Holding Brake	Without
Gear Box Type	Without
Nominal Speed	1000 rpm at 24 V 2000 rpm at 48 V
Nominal Torque	0.45 N.m
Holding Torque	0.45 N.m

Complementary

Transmission Rate	125, 250, 500 kbauds
Mounting Support	Flange
Motor Flange Size	57 mm
Number Of Motor Stacks	1
Centring Collar Diameter	38.1 mm
Centring Collar Depth	1.6 mm
Number Of Mounting Holes	4
Mounting Holes Diameter	5.2 mm
Circle Diameter Of The Mounting Holes	66.6 mm

Disclaimer: This documentation is not intended as a substitute for and is not to be used for determining suitability or reliability of these products for specific user applications

Feedback Type	Index pulse
Shaft End	Untapped
Second Shaft	Without second shaft end
Shaft Diameter	6.35 mm
Shaft Length	21 mm
Supply Voltage Limits	18…55 V
Current Consumption	3500 mA maximum continuous
Associated Fuse Rating	16 A
Commissioning Interface	RS485 Modbus TCP (9.6, 19.2 and 38.4 kbauds)
Input/Output Type	4 signals (each be used as input or output)
Voltage State 0 Guaranteed	-3...4.5 V
Voltage State 1 Guaranteed	15...30 V
Discrete Input Current	10 mA at 24 V for safety input 2 mA at 24 V for 24 V signal interface
Discrete Output Voltage	23...25 V
Maximum Switching Current	100 mA per output 200 mA total
Protection Type	Overload of output voltage Safe torque off Short circuit of the output voltage
Peak Stall Torque	0.45 N.m
Continuous Stall Torque	0.45 N.m
Speed Feedback Resolution	20000 points/turn
Accuracy Error	+/- 6 arc min
Rotor Inertia	0.1 kg.cm²
Maximum Mechanical Speed	3000 rpm
Maximum Radial Force Fr	24 N
Maximum Axial Force Fa	100 N (tensile force) 8.4 N (force pressure)
Service Life In Hours	20000 h bearing
Marking	CE
Type Of Cooling	Natural convection
Net Weight	1.3 kg

Environment

Standards	EN/IEC 50178 EN/IEC 61800-3 IEC 60072-1 IEC 61800-3, Ed 2 EN 61800-3:2001, second environment EN 61800-3 : 2001-02 EN 50347
Product Certifications	TÜV UL cUL
Ambient Air Temperature For Operation	40…55 °C (with power derating of 2 % per °C) 0…40 °C (without derating)

Permissible Ambient Air Temperature Around The Device	105 °C power amplifier 110 °C motor
Ambient Air Temperature For Storage	-25…70 °C
Operating Altitude	<= 1000 m without derating
Relative Humidity	15…85 % without condensation
Vibration Resistance	20 m/s² (f= 10…500 Hz) 10 cycles conforming to EN/IEC 60068-2-6
Shock Resistance	150 m/s² 1000 shocks conforming to EN/IEC 60068-2-29
Ip Degree Of Protection	IP41 shaft bushing: conforming to EN/IEC 60034-5 IP54 total except shaft bushing: conforming to EN/IEC 60034-5

Packing Units

Unit Type Of Package 1	PCE
Number Of Units In Package 1	1
Package 1 Height	10.5 cm
Package 1 Width	19.0 cm
Package 1 Length	39.0 cm
Package 1 Weight	2.1 kg

Contractual warranty

Warranty	18 months

Sustainability

Green Premium™ label is Schneider Electric's commitment to delivering products with best-in-class environmental performance. Green Premium promises compliance with the latest regulations, transparency on environmental impacts, as well as circular and low-CO_2 products.

Guide to assessing product sustainability is a white paper that clarifies global eco-label standards and how to interpret environmental declarations.

Learn more about Green Premium >

Guide to assess a product's sustainability >

Transparency RoHS/REACh

Well-being performance

Mercury Free

Rohs Exemption Information	Yes

Certifications & Standards

Reach Regulation	REACh Declaration
Eu Rohs Directive	Pro-active compliance (Product out of EU RoHS legal scope)
China Rohs Regulation	China RoHS declaration
Environmental Disclosure	Product Environmental Profile
Weee	The product must be disposed on European Union markets following specific waste collection and never end up in rubbish bins
Circularity Profile	End of Life Information

Dimensions Drawings

Integrated Drive

Dimensions

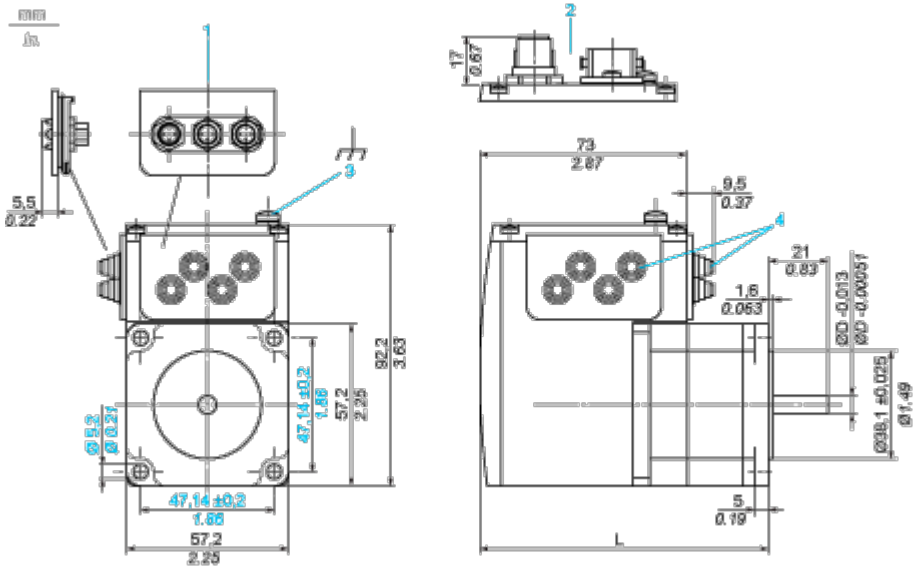

1 Accessories: I/O signal insert with industrial connectors

2 Option: industrial connectors

3 Earth (ground) terminal

4 Accessories: cable entries Ø = 3 ... 9 mm/0.12 ... 0.35 in.

L 101.9 mm/4.01 in.

D 6.35 mm/0.25 in.

Connections and Schema

Connection Example with 4 I/O Signals

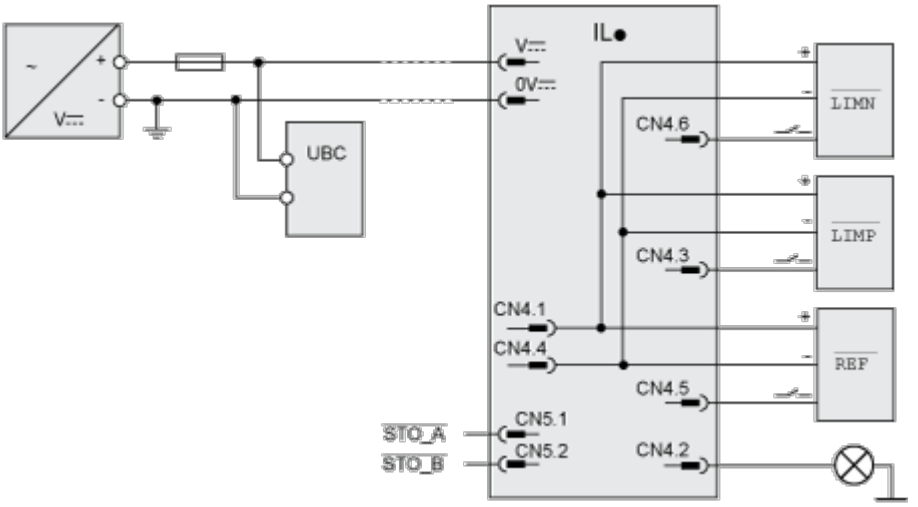

Performance Curves

Torque Characteristics

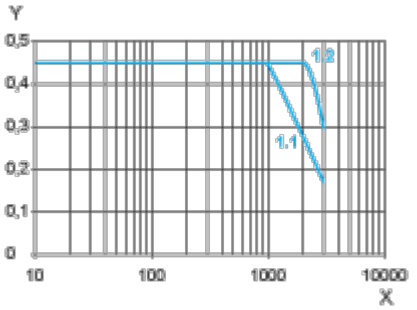

X Speed of rotation in rpm

Y Torque in Nm

1.1 Max. torque at 24 V

1.2 Max. torque at 48 V