Product datasheet

Specifications

Green Premium™

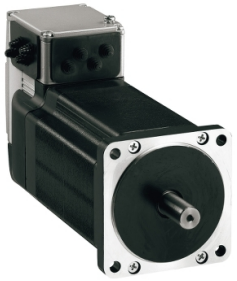

integrated drive ILS with stepper motor - 24..36V - pulse/direction 5V RS422- 6A

ILS1W853TB1F0

Discontinued on: 9 Feb 2023

Discontinued

EAN Code: 3389119227919

Main

Range Of Product	Lexium integrated drive
Product Or Component Type	Motion integrated drive
Device Short Name	ILS
Motor Type	3-phase stepper motor
Number Of Motor Poles	6
Network Number Of Phases	Single phase
[Us] Rated Supply Voltage	24 V 36 V
Network Type	DC
Communication Interface	Pulse/direction 5 V RS422, integrated
Length	247.3 mm
Winding Type	High speed of rotation and medium torque
Electrical Connection	Printed circuit board connector
Holding Brake	With
Gear Box Type	Without
Nominal Speed	100 rpm at 24 V 300 rpm at 36 V
Nominal Torque	4.5 N.m
Holding Torque	6 N.m holding brake 4.5 N.m

Complementary

Mounting Support	Flange
Motor Flange Size	85 mm
Number Of Motor Stacks	3
Centring Collar Diameter	60 mm
Centring Collar Depth	2 mm
Number Of Mounting Holes	4
Mounting Holes Diameter	6.5 mm
Circle Diameter Of The Mounting Holes	99 mm
Feedback Type	Index pulse

Disclaimer: This documentation is not intended as a substitute for and is not to be used for determining suitability or reliability of these products for specific user applications

Shaft End	Untapped
Second Shaft	Without second shaft end
Shaft Diameter	14 mm
Shaft Length	30 mm
Supply Voltage Limits	18…40 V
Current Consumption	6000 mA maximum continuous
Associated Fuse Rating	10 A
Input/Output Type	4 signals (each be used as input or output)
Voltage State 0 Guaranteed	-3...4.5 V
Voltage State 1 Guaranteed	15...30 V
Discrete Input Current	10 mA at 24 V for safety input
Discrete Output Voltage	23...25 V
Maximum Switching Current	100 mA per output 200 mA total
Protection Type	Overload of output voltage Safe torque off Short circuit of the output voltage
Peak Stall Torque	4.5 N.m
Continuous Stall Torque	4.5 N.m
Speed Feedback Resolution	1.8°, 0.9°, 0.72°, 0.36°, 0.18°, 0.09°, 0.072°, 0.036° 200, 400, 500, 1000, 2000, 4000, 5000, 10000 steps
Accuracy Error	+/- 6 arc min
Rotor Inertia	3.5 kg.cm²
Maximum Mechanical Speed	2000 rpm
Maximum Radial Force Fr	110 N
Maximum Axial Force Fa	170 N (tensile force) 30 N (force pressure)
Service Life In Hours	20000 h bearing
Brake Pull-In Power	22 W
Brake Release Time	40 ms
Brake Application Time	20 ms
Marking	CE
Type Of Cooling	Natural convection
Net Weight	6.5 kg

Environment

Standards	EN 61800-3:2001, second environment EN 50347 EN 61800-3 : 2001-02 EN/IEC 50178 IEC 61800-3, Ed 2 EN/IEC 61800-3 IEC 60072-1
Product Certifications	TÜV UL cUL
Ambient Air Temperature For Operation	50…65 °C (with power derating of 2 % per °C) 0…50 °C (without derating)

Permissible Ambient Air Temperature Around The Device	105 °C power amplifier 110 °C motor
Ambient Air Temperature For Storage	-25…70 °C
Operating Altitude	<= 1000 m without derating
Relative Humidity	15…85 % without condensation
Vibration Resistance	20 m/s² (f= 10…500 Hz) 10 cycles conforming to EN/IEC 60068-2-6
Shock Resistance	150 m/s² 1000 shocks conforming to EN/IEC 60068-2-29
Ip Degree Of Protection	IP41 shaft bushing: conforming to EN/IEC 60034-5 IP54 total except shaft bushing: conforming to EN/IEC 60034-5

Packing Units

Unit Type Of Package 1	PCE
Number Of Units In Package 1	1
Package 1 Height	10.5 cm
Package 1 Width	19.0 cm
Package 1 Length	39.0 cm
Package 1 Weight	5.5 kg

Contractual warranty

Warranty	18 months

Sustainability

Green Premium™ label is Schneider Electric's commitment to delivering products with best-in-class environmental performance. Green Premium promises compliance with the latest regulations, transparency on environmental impacts, as well as circular and low-CO_2 products.

Guide to assessing product sustainability is a white paper that clarifies global eco-label standards and how to interpret environmental declarations.

Learn more about Green Premium >

Guide to assess a product's sustainability >

Transparency RoHS/REACh

Well-being performance

Mercury Free

Rohs Exemption Information	Yes

Certifications & Standards

Reach Regulation	REACh Declaration
Eu Rohs Directive	Pro-active compliance (Product out of EU RoHS legal scope)
China Rohs Regulation	China RoHS declaration
Environmental Disclosure	Product Environmental Profile
Weee	The product must be disposed on European Union markets following specific waste collection and never end up in rubbish bins
Circularity Profile	End of Life Information

Dimensions Drawings

Integrated Drive with Holding Brake

Dimensions

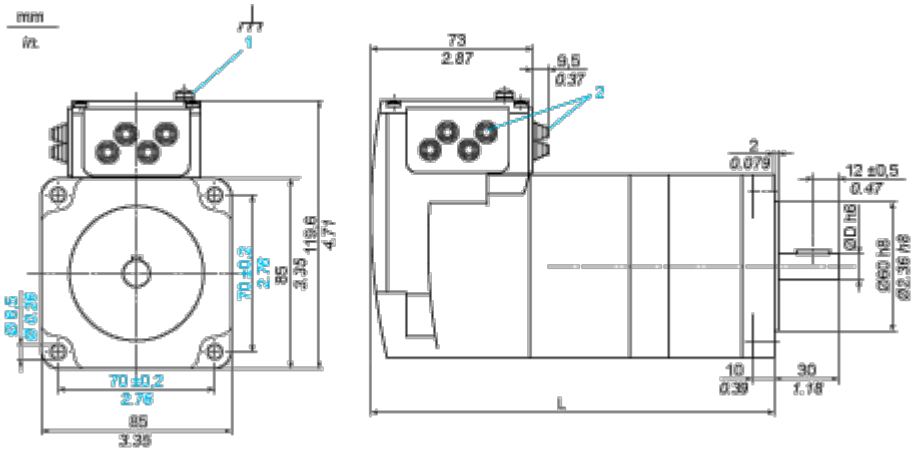

1 Earth (ground) terminal

2 Accessories: cable entries Ø = 3 ... 9 mm/0.12 ... 0.35 in.

L 247.3 mm/9.74 in.

D 14 mm/0.55 in.

Connections and Schema

Multifunction Interface

Input Wiring Diagram

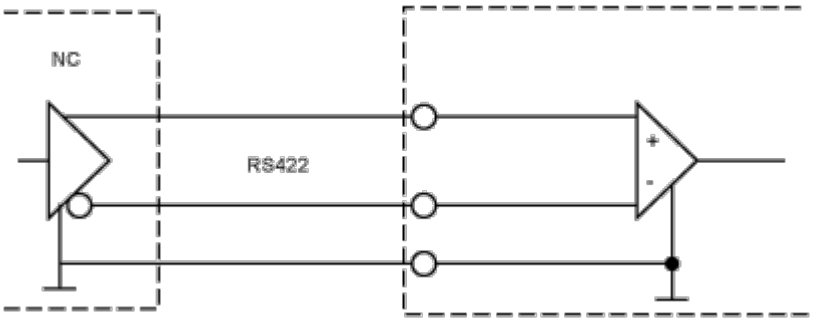

The reference pulses are supplied via two of the signal inputs, either as pulse/ direction signals or as A/B signals. The other signal inputs have the functions “power amplifier enable/pulse blocking” and “step size switching/PWM motor current control".

Performance Curves

Torque Characteristics

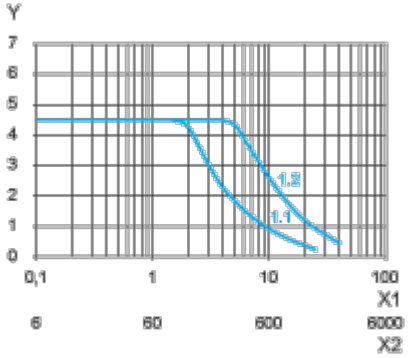

X1 Frequency in kHz

X2 Speed of rotation in rpm

Y Torque in Nm

1.1 Max. torque at 24 V

1.2 Max. torque at 36 V