Product datasheet

Specifications

Green Premium™

touch panel screen 5"7 Color

Local distributor code:

395511385 HMISTU855

EAN Code: 3606489909499

Main

Range Of Product	Harmony STO & STU
Product Or Component Type	Touch panel screen
Software Designation	Vijeo Designer
Operating System	Harmony
Processor Name	CPU ARM9

Complementary

Display Size	5.7 inch
Display Type	QVGA TFT colour touchscreen
Display Colour	65536 colours
Display Resolution	320 x 240 pixels QVGA
Touch Panel	Analogue
Backlight Lifespan	50000 hours
Brightness	16 levels
Character Font	Taiwanese (traditional Chinese) Japanese (ANK, Kanji) Chinese (simplified Chinese) ASCII Korean
[Us] Rated Supply Voltage	24 V DC
Supply	External source
Supply Voltage Limits	20.4…28.8 V
Inrush Current	30 A
Power Consumption In W	6.8 W
Number Of Pages	Limited by internal memory capacity
Processor Frequency	333 MHz
Memory Description	Application memory 16 MB Back up of data 64 kB
Integrated Connection Type	1 USB 2.0 type mini B 1 USB 2.0 type A COM1 serial link - female RJ45 - RS232C/RS485 (rate: <= 115.2 kbits/s) power supply - removable screw terminal block 1 Ethernet - RJ45
Realtime Clock	Access to the PLC real-time clock

Disclaimer: This documentation is not intended as a substitute for and is not to be used for determining suitability or reliability of these products for specific user applications

Downloadable Protocols	Uni-TE Modbus TCP/IP Third party protocols Modbus
Fixing Mode	Ø 22 mm hole
Enclosure Material	PC/PBT and PAA
Marking	With Schneider logo CE
Height	129.15 mm
Width	163 mm
Depth	56.5 mm

Environment

Immunity To Microbreaks	7 ms
Standards	UL 1604 FCC Class A IEC 61000-6-2 IEC 61131-2 UL 508
Product Certifications	UL class 1 Div2 T4A ou T5 C-Tick cULus Marine UKCA
Ambient Air Temperature For Operation	0…50 °C
Ambient Air Temperature For Storage	-20…60 °C
Relative Humidity	0…85 % without condensation
Operating Altitude	<= 2000 m
Ip Degree Of Protection	IP20 (rear panel) conforming to IEC 60529 IP65 (front panel) conforming to IEC 60529
Nema Degree Of Protection	NEMA 4X front panel (indoor use)
Shock Resistance	15 gn for 11 ms conforming to IEC 60068-2-27
Vibration Resistance	+/- 3.5 mm (f = 5…9 Hz) conforming to IEC 60068-2-6 1 gn (f = 9…150 Hz) conforming to IEC 60068-2-6
Resistance To Electromagnetic Fields	10 V/m conforming to IEC 61000-4-3

Packing Units

Unit Type Of Package 1	PCE
Number Of Units In Package 1	1
Package 1 Height	7.000 cm
Package 1 Width	18.000 cm
Package 1 Length	27.000 cm
Package 1 Weight	869.000 g
Unit Type Of Package 2	S03
Number Of Units In Package 2	8
Package 2 Height	30.000 cm
Package 2 Width	30.000 cm
Package 2 Length	40.000 cm

Package 2 Weight	7.315 kg
Unit Type Of Package 3	P12
Number Of Units In Package 3	192
Package 3 Height	130.000 cm
Package 3 Width	80.000 cm
Package 3 Length	120.000 cm
Package 3 Weight	187.560 kg

Contractual warranty

Warranty	18 months

Sustainability

Green Premium™ label is Schneider Electric's commitment to delivering products with best-in-class environmental performance. Green Premium promises compliance with the latest regulations, transparency on environmental impacts, as well as circular and low-CO_2 products.

Guide to assessing product sustainability is a white paper that clarifies global eco-label standards and how to interpret environmental declarations.

Learn more about Green Premium >

Guide to assess a product's sustainability >

Transparency RoHS/REACh

Resource performance

Upgradeable Through Digital Modules And Upgraded Components

Well-being performance

Mercury Free

Rohs Exemption Information	Yes

Certifications & Standards

Reach Regulation	REACh Declaration
Eu Rohs Directive	Pro-active compliance (Product out of EU RoHS legal scope)
China Rohs Regulation	China RoHS declaration
Environmental Disclosure	Product Environmental Profile
Weee	The product must be disposed on European Union markets following specific waste collection and never end up in rubbish bins
Circularity Profile	End of Life Information

Dimensions Drawings

Display and Rear Modules

Dimensions

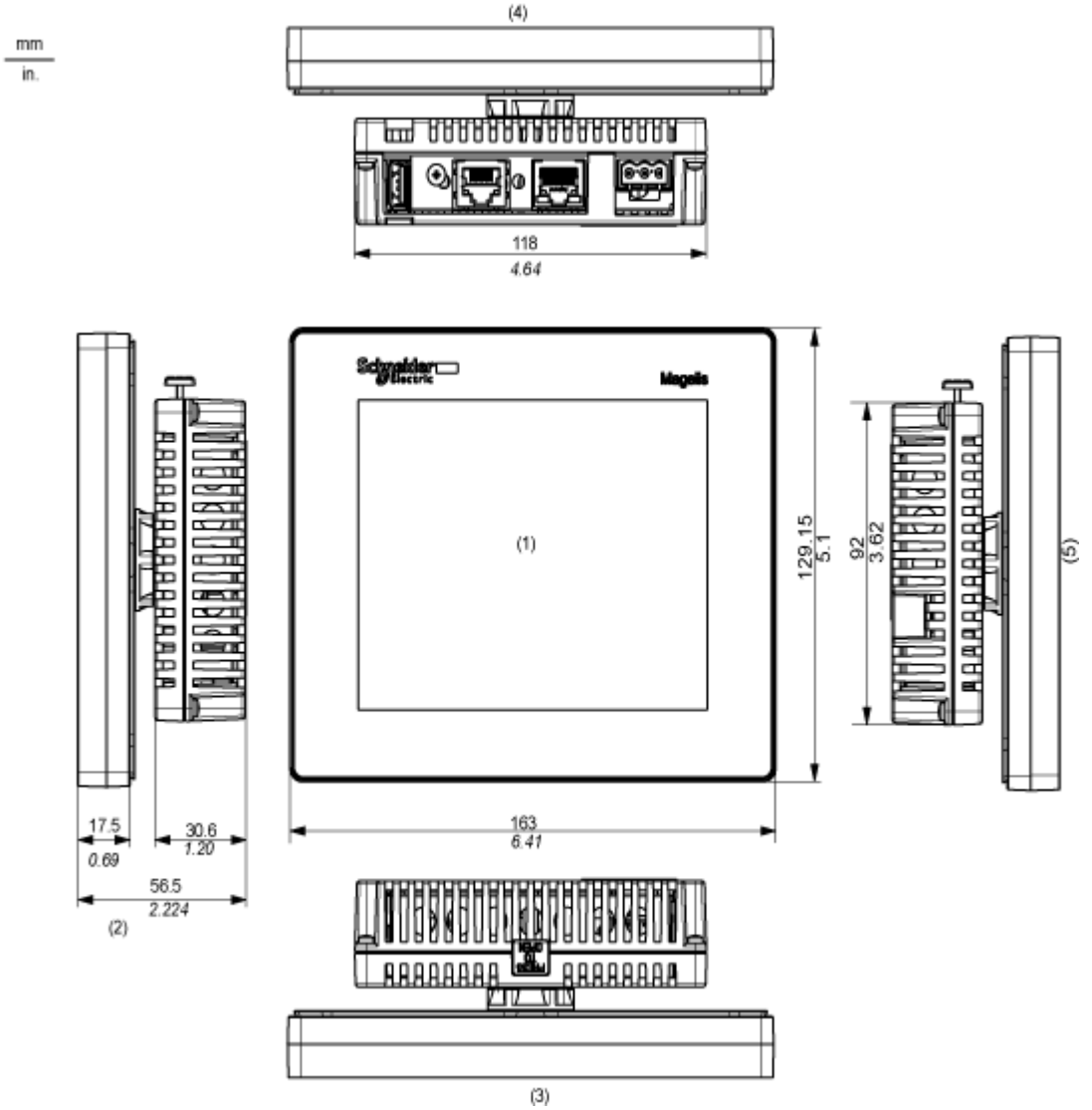

(1) Front

(2) Right side

(3) Top

(4) Bottom

(5) Left side

Rear Module

Dimensions

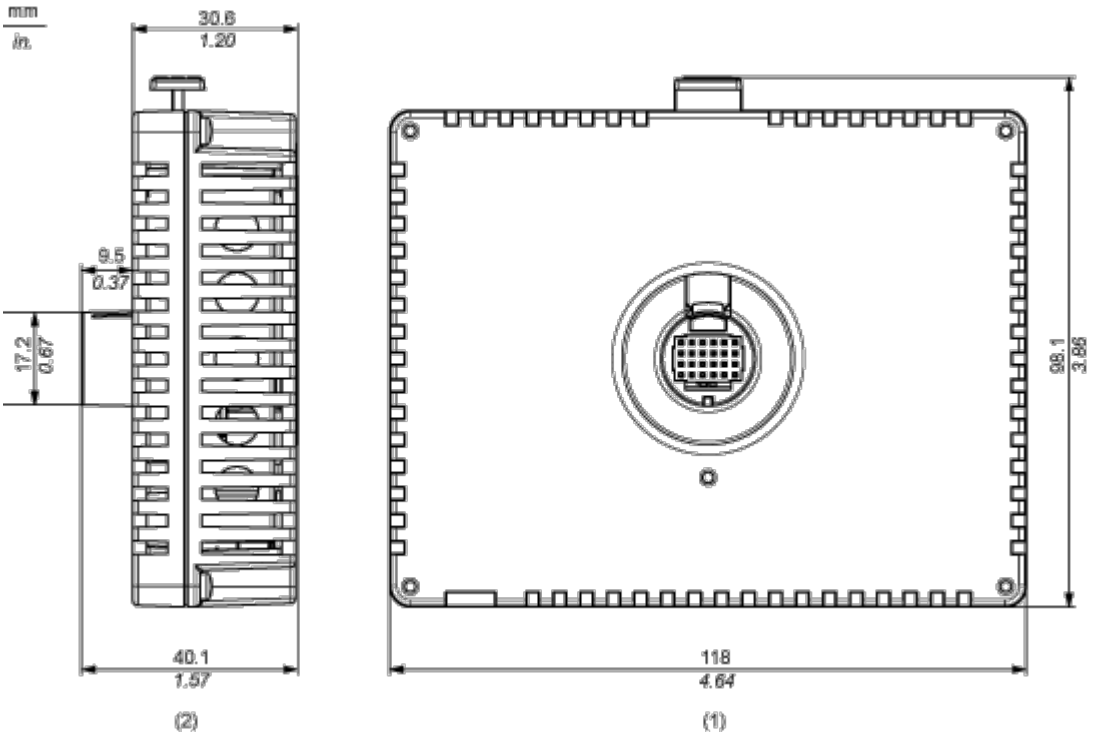

(1) Front

(2) Right Side

Display Module

Dimensions

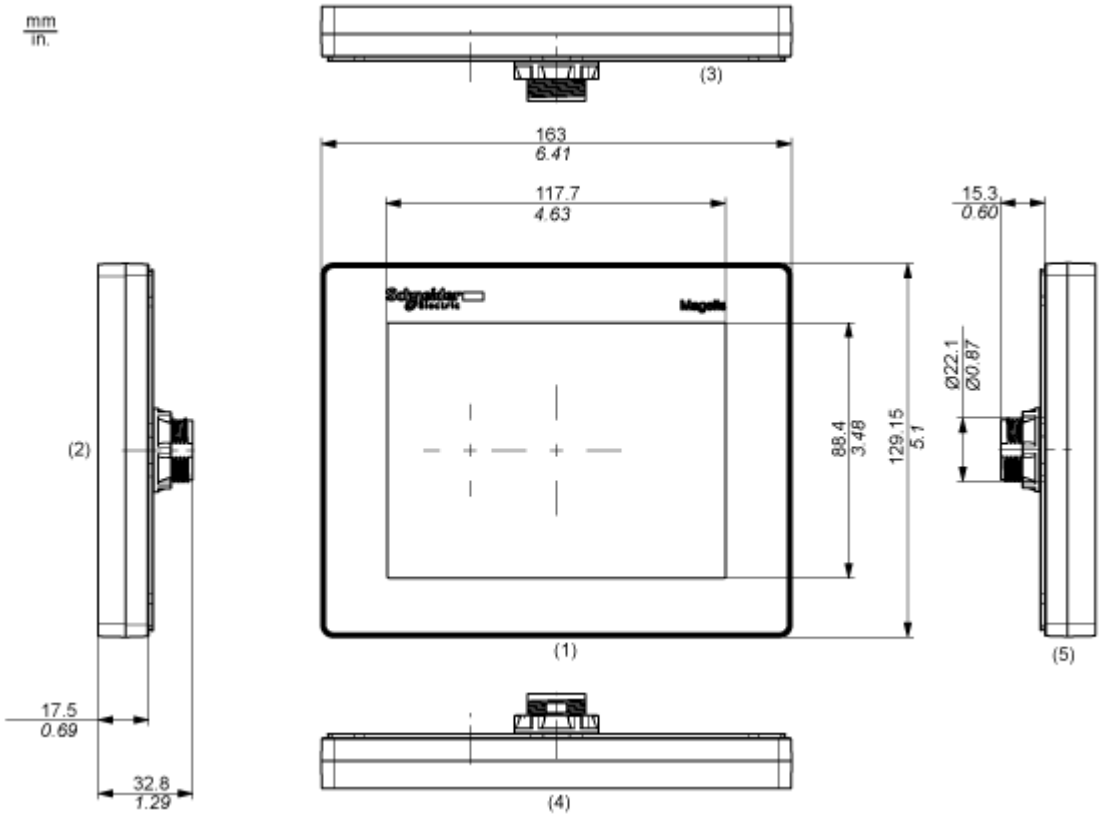

(1) Front

(2) Right Side

(3) Bottom

(4) Top

(5) Left Side

Mounting and Clearance

Clearance

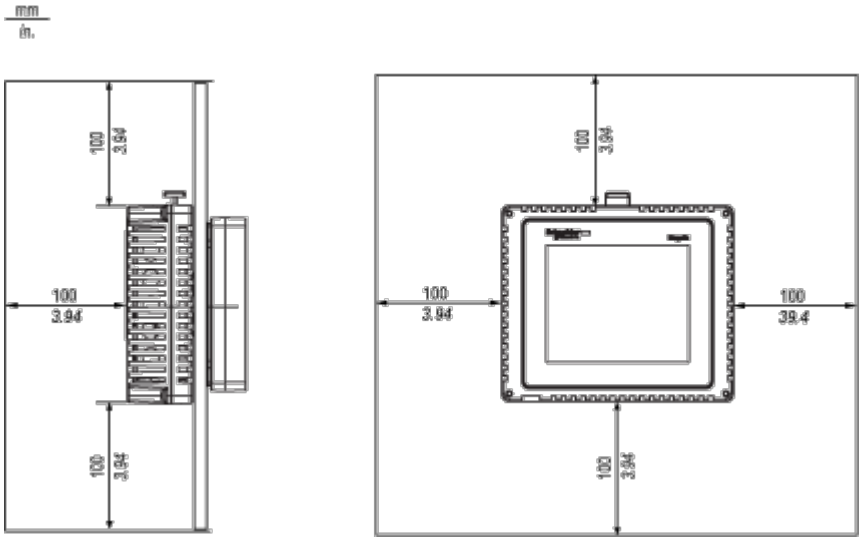

Panel Cut-out Dimensions

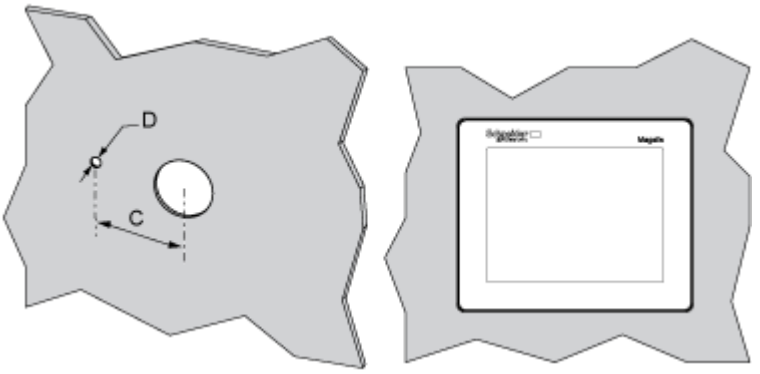

C (mm)	C (in.)	D (mm)	D (in.)
+0 30.00 -0.20	+0 1.18 -0.007	+0 4.00 -0.20	+0 0.15 -0.007

NOTE: With the tee option, the rotating torque that can be supported by the display module is 6 Nm (53.10 in-lb).