Product datasheet

Specifications

Green Premium™

touch panel screen 3"4 Monochrome W/P/R for Zelio

HMISTO501

Discontinued on: 27 Dec 2019

To be end-of-service on: 31 Dec 2025

Discontinued

EAN Code: 3595864127835

Main

Range Of Product	Harmony STO & STU
Product Or Component Type	Touch panel screen
Software Designation	Vijeo Designer
Operating System	Harmony
Processor Name	CPU RISC

Complementary

Display Size	3.4 inch
Display Type	Backlit monochrome STN LCD
Background Colour	White, pink and red
Display Resolution	200 x 80 pixels
Touch Panel	Analogue
Backlight Lifespan	10000 hours with red 50000 hours with pink 50000 hours with white
Brightness	8 levels
Contrast	16 levels via touch panel
Character Font	Korean Japanese (ANK, Kanji) Taiwanese (traditional Chinese) Chinese (simplified Chinese) ASCII
[Us] Rated Supply Voltage	24 V DC +/- 20 %
Inrush Current	30 A
Local Signalling	1 LED (green) for normal operation
Power Consumption In W	5 W
Number Of Pages	Limited by internal memory capacity
Processor Frequency	333 MHz
Memory Description	Application memory 16 MB Back up of data 128 kB
Integrated Connection Type	1 USB 2.0 type mini B 1 USB 2.0 type A power supply - removable screw terminal block serial link - 9-pin terminal block - RS232C
Supply	External source

Disclaimer: This documentation is not intended as a substitute for and is not to be used for determining suitability or reliability of these products for specific user applications

Realtime Clock	Access to the PLC real-time clock
Downloadable Protocols	Zelio
Range Compatibility	Zelio Logic
Fixing Mode	By 2 spring clips, mounting on 1.6...5 mm thick panel
Enclosure Material	PPT
Marking	CE

Environment

Immunity To Microbreaks	3 ms
Standards	IEC 61000-6-2 FCC Class A UL 508 UL 1604 EN 61131-2
Product Certifications	CE UL Class 1 Division 2 T5 UL Class 1 Division 2 T4A C-Tick cULus
Ambient Air Temperature For Operation	0…50 °C
Ambient Air Temperature For Storage	-20…60 °C
Relative Humidity	0…90 % without condensation
Operating Altitude	<= 2000 m
Ip Degree Of Protection	IP20 (rear panel) conforming to IEC 60529 IP65 (front panel) conforming to IEC 60529
Nema Degree Of Protection	NEMA 4X front panel (indoor use)
Shock Resistance	15 gn for 11 ms conforming to IEC 60068-2-27
Vibration Resistance	+/- 3.5 mm (f = 5…9 Hz) conforming to IEC 60068-2-6 1 gn (f = 9…150 Hz) conforming to IEC 60068-2-6
Electromagnetic Compatibility	Resistance to radiated electromagnetic fields - test level: 10 V/m conforming to IEC 61000-4-3

Packing Units

Unit Type Of Package 1	PCE
Number Of Units In Package 1	1
Package 1 Height	8.5 cm
Package 1 Width	13.0 cm
Package 1 Length	19.0 cm
Package 1 Weight	382.0 g
Unit Type Of Package 2	S03
Number Of Units In Package 2	12
Package 2 Height	30.0 cm
Package 2 Width	30.0 cm
Package 2 Length	40.0 cm
Package 2 Weight	5.099 kg

Contractual warranty

Warranty	18 months

Sustainability

Green Premium™ label is Schneider Electric's commitment to delivering products with best-in-class environmental performance. Green Premium promises compliance with the latest regulations, transparency on environmental impacts, as well as circular and low-CO_2 products.

Guide to assessing product sustainability is a white paper that clarifies global eco-label standards and how to interpret environmental declarations.

Learn more about Green Premium >

Guide to assess a product's sustainability >

Transparency RoHS/REACh

Well-being performance

- Reach Free Of Svhc
- Mercury Free
- Rohs Exemption Information — Yes

Certifications & Standards

Reach Regulation	REACh Declaration
Eu Rohs Directive	Pro-active compliance (Product out of EU RoHS legal scope)
China Rohs Regulation	China RoHS declaration
Environmental Disclosure	Product Environmental Profile
Weee	The product must be disposed on European Union markets following specific waste collection and never end up in rubbish bins
Circularity Profile	End of Life Information

Dimensions Drawings

Dimensions with Spring Clips

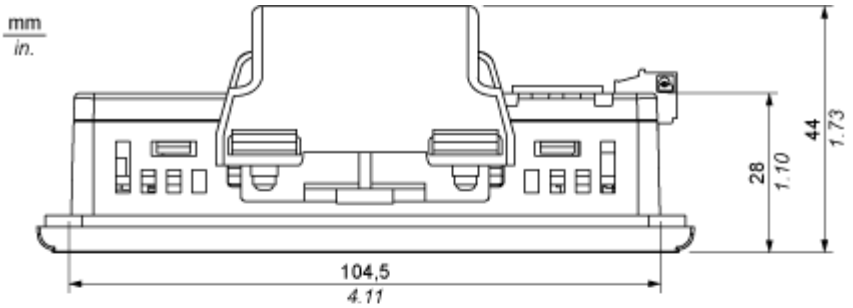

(1)

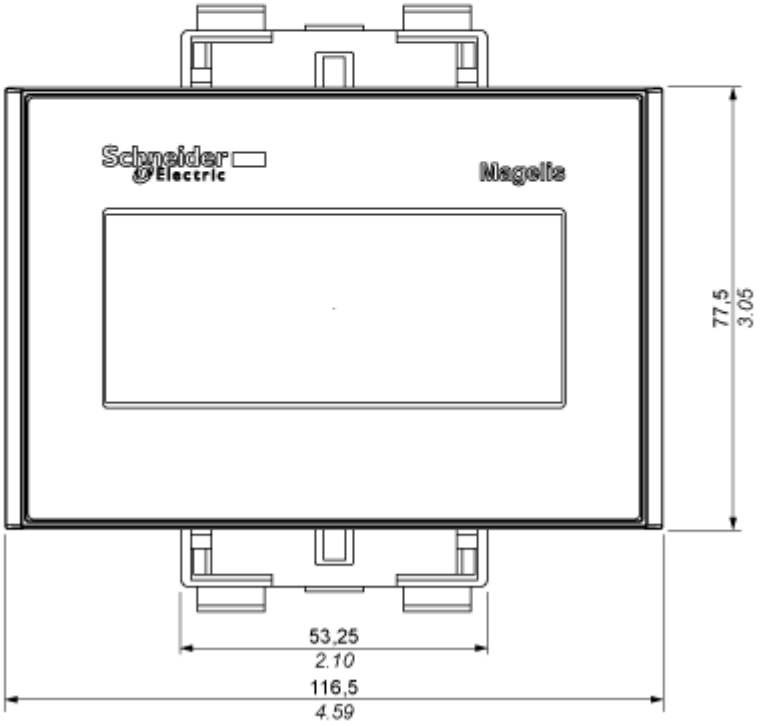

(2)

(1) Top

(2) Front

Dimensions without Spring Clips

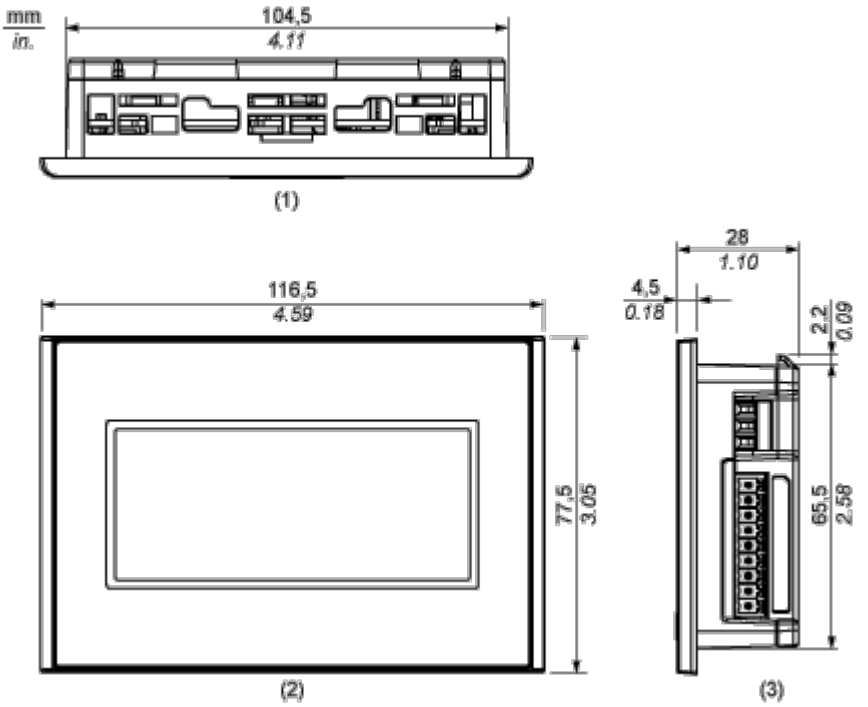

(1) Top

(2) Front

(3) Right Side

Mounting and Clearance

Clearance

mm
in.

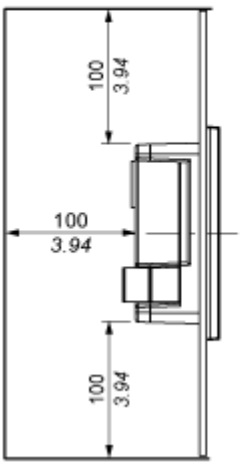

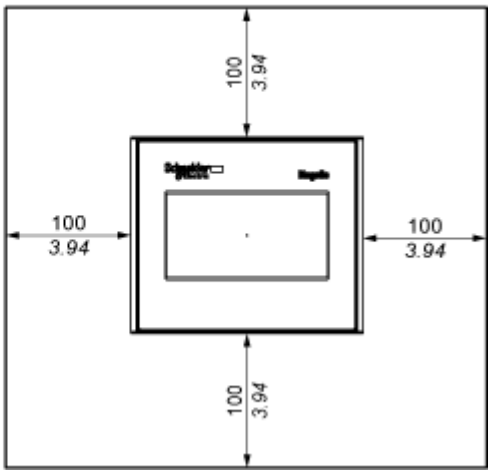

Panel Cut-out Dimensions

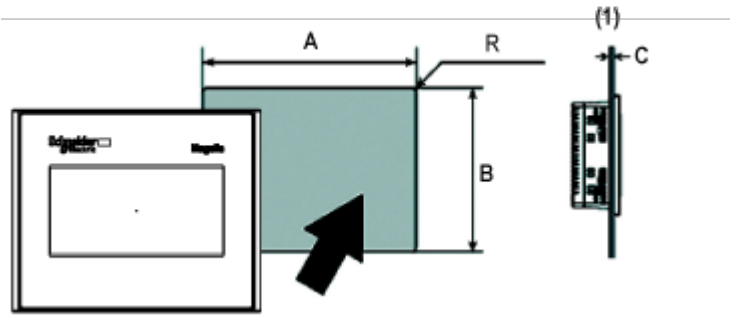

(1) Panel

A (mm)	A (in.)	B (mm)	B (in.)	C (mm) Spring Clips	C (in.) Spring Clips	R (mm)	R (in.)
+1 105 -0	+0.04 4.13 -0	+1 66 -0	+0.04 2.59 -0	1.5 to 6.0	0.059 to 0.236	2.0 to 3.0	0.078 to 0.118