Product datasheet

Specifications

advanced touchscreen panel 320 x 240 pixels QVGA- 5.7" TFT - 96 MB

Local distributor code:

398059158 HMIGTO2310

EAN Code: 3595864150246

Main

Range Of Product	Harmony GTO
Product Or Component Type	Advanced touchscreen panel
Display Colour	65536 colours
Display Size	5.7 inch
Supply	External source
Operating System	Harmony
Battery Type	Lithium battery for internal RAM, autonomy: 100 days, charging time = 5 day(s), battery life = 10 year(s)

Complementary

Terminal Type	Touchscreen display
Display Type	Backlit colour TFT LCD
Display Resolution	320 x 240 pixels QVGA
Touch Sensitive Zone	1024 x 1024
Touch Panel	Resistive film, 1000000 cycles
Backlight Lifespan	50000 hours white at 25 °C
Brightness	16 levels - control by touch panel 16 levels - control by software
Character Font	Korean Taiwanese (traditional Chinese) ASCII (European characters) Chinese (simplified Chinese) Japanese (ANK, Kanji)
[Us] Rated Supply Voltage	24 V DC
Supply Voltage Limits	19.2…28.8 V
Inrush Current	30 A
Maximum Power Consumption In W	6.5 W when power is not supplied to external devices 4.5 W when backlight is OFF 5 W when backlight is dimmed 10.5 W
Local Signalling	Status LED green, steady for offline Status LED green, steady for operating Status LED orange, flashing for software starting up Status LED red, steady for power supply (ON) Status LED clear, faded for power supply (OFF) COM2 LED yellow, steady for data is being transmitted COM2 LED yellow, faded for no data transmission SD card LED green, steady for card is inserted SD card LED green, faded for card is not inserted or is not being accessed
Software Designation	Vijeo Designer configuration software >= V6.1

Disclaimer: This documentation is not intended as a substitute for and is not to be used for determining suitability or reliability of these products for specific user applications

Memory Description	Flash EPROM, 96 MB
Data Backed Up	512 KB internal RAM (SRAM)
Data Storage Equipment	SD card, <= 32 GB SDHC card, <= 32 GB
Downloadable Protocols	Schneider Electric Modicon Modbus Schneider Electric Modicon Uni-TE Schneider Electric Modicon Modbus Plus Schneider Electric Modicon FIPWAY Mitsubishi Melsec third party protocols Omron Sysmac third party protocols Rockwell Automation Allen-Bradley third party protocols Siemens Simatic third party protocols Schneider Electric Modicon Modbus TCP
Integrated Connection Type	COM1 serial link SUB-D 9, interface: RS232C, transmission rate: 2400...115200 bps COM2 serial link RJ45, interface: RS485, transmission rate: 2400...115200 bps COM2 serial link RJ45, interface: RS485, transmission rate: 187.5 kbps compatible with Siemens MPI Ethernet RJ45, interface: 10BASE-T/100BASE-TX Ethernet RJ45, interface: IEEE 802.3 USB 2.0 type A USB 2.0 type mini B
Product Mounting	Flush mounting
Fixing Mode	By 4 screw clamps
Front Material	PPT
Enclosure Material	PPT
Type Of Cooling	Natural convection
Width	169.5 mm
Height	137 mm
Depth	59.5 mm
Net Weight	0.8 kg

Environment

Standards	IEC 61000-6-2 UL 508 IEC 61131-2
Product Certifications	cULus C-Tick CE KCC UKCA UKEX
Ambient Air Temperature For Operation	0…55 °C
Ambient Air Temperature For Storage	-20…60 °C
Relative Humidity	10…90 % without condensation
Operating Altitude	< 2000 m
Ip Degree Of Protection	IP20 (rear panel) conforming to IEC 60529 IP65 (front panel) conforming to IEC 60529
Nema Degree Of Protection	NEMA 4X front panel (indoor use)
Shock Resistance	147 m/s² 3 chocks in each direction X, Y and Z conforming to IEC 61131-2
Vibration Resistance	3.5 mm (f = 5…9 Hz) - X, Y, Z directions for 10 cycles (approx. 100 min) - conforming to IEC 61131-2 1 gn (f = 9…150 Hz) - X, Y, Z directions for 10 cycles (approx. 100 min) - conforming to IEC 61131-2
Resistance To Electrostatic Discharge	6 kV contact discharge conforming to IEC 61000-4-2 level 3

Packing Units

Unit Type Of Package 1	PCE
Number Of Units In Package 1	1
Package 1 Height	14.500 cm
Package 1 Width	18.500 cm
Package 1 Length	23.500 cm
Package 1 Weight	1.055 kg
Unit Type Of Package 2	S03
Number Of Units In Package 2	4
Package 2 Height	30.000 cm
Package 2 Width	30.000 cm
Package 2 Length	40.000 cm
Package 2 Weight	5.000 kg
Unit Type Of Package 3	P12
Number Of Units In Package 3	64
Package 3 Height	105.000 cm
Package 3 Width	80.000 cm
Package 3 Length	120.000 cm
Package 3 Weight	100.000 kg

Contractual warranty

Warranty	18 months

Sustainability

Green Premium™ label is Schneider Electric's commitment to delivering products with best-in-class environmental performance. Green Premium promises compliance with the latest regulations, transparency on environmental impacts, as well as circular and low-CO_2 products.

Guide to assessing product sustainability is a white paper that clarifies global eco-label standards and how to interpret environmental declarations.

Learn more about Green Premium >

Guide to assess a product's sustainability >

Transparency RoHS/REACh

Well-being performance

Mercury Free

Rohs Exemption Information	Yes

Certifications & Standards

Reach Regulation	REACh Declaration
Eu Rohs Directive	Pro-active compliance (Product out of EU RoHS legal scope)
China Rohs Regulation	China RoHS declaration
Environmental Disclosure	Product Environmental Profile
Weee	The product must be disposed on European Union markets following specific waste collection and never end up in rubbish bins
Circularity Profile	End of Life Information

Dimensions Drawings

Dimensions

External Dimensions

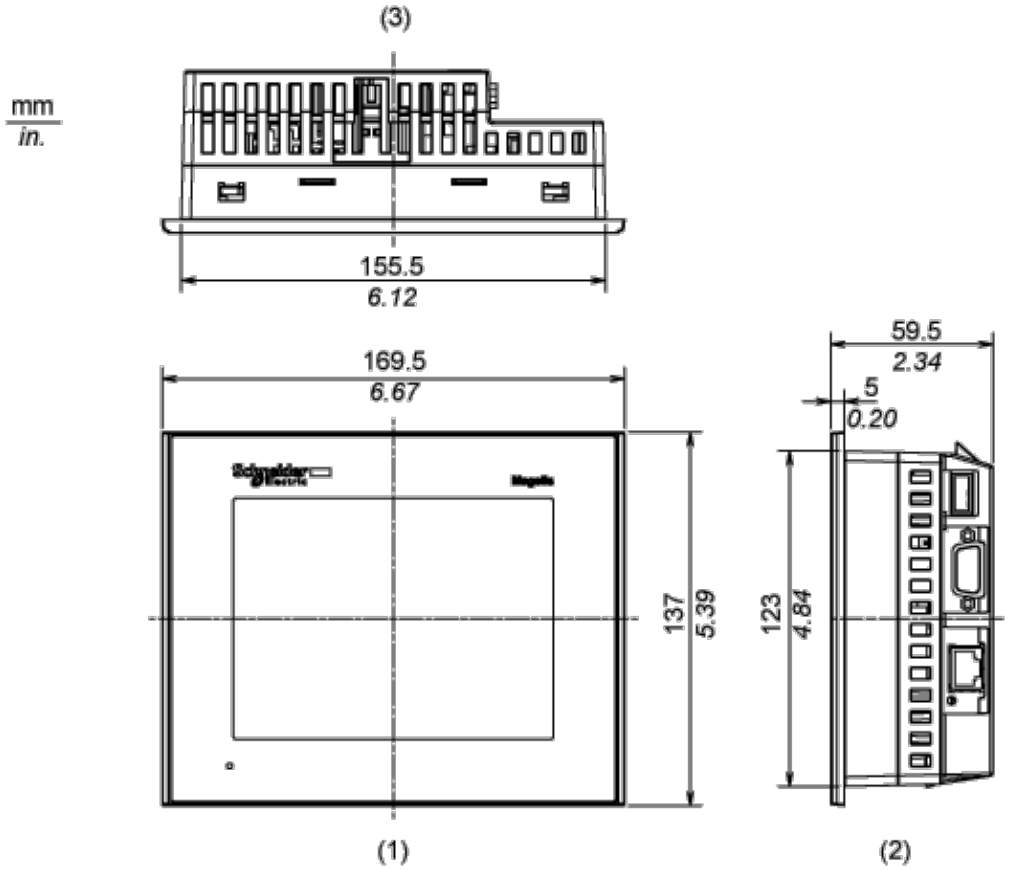

1 Front

2 Right Side

3 Top

Installation with Installation Fasteners

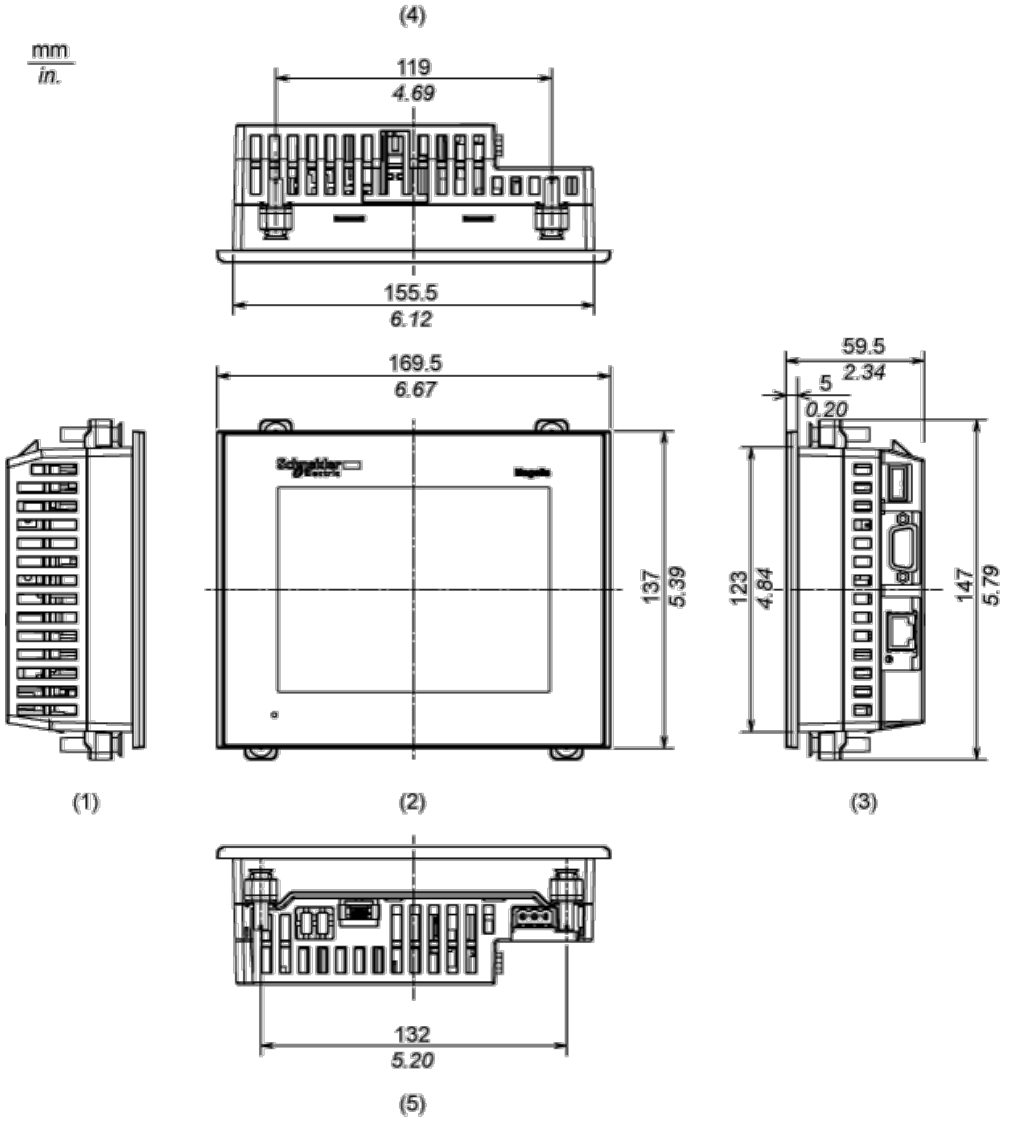

1 Left Side

2 Front

3 Right Side

4 Top

5 Bottom

Dimensions with Cables

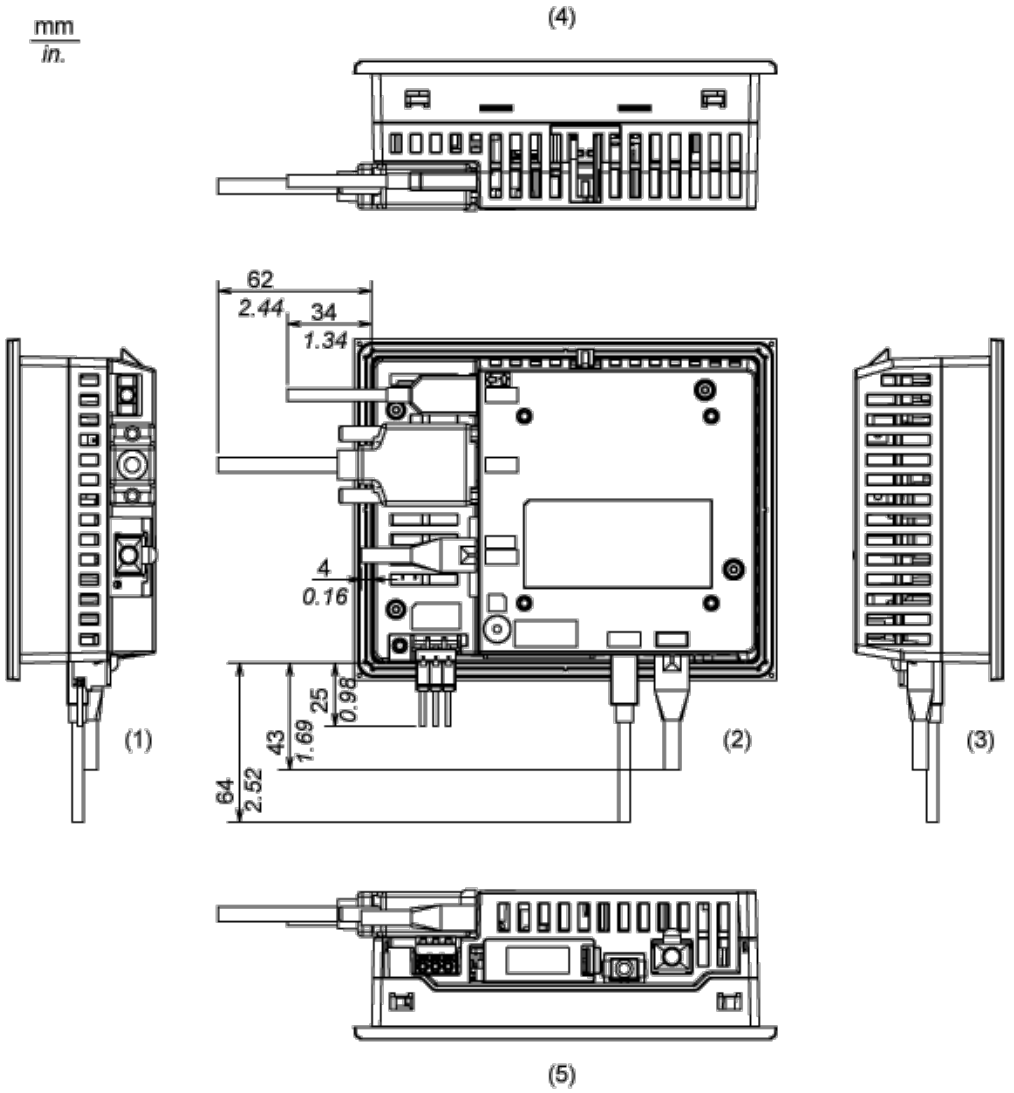

1 Left Side

2 Rear

3 Right Side

4 Top

5 Bottom

Mounting and Clearance

Mounting

Panel Cut Dimensions

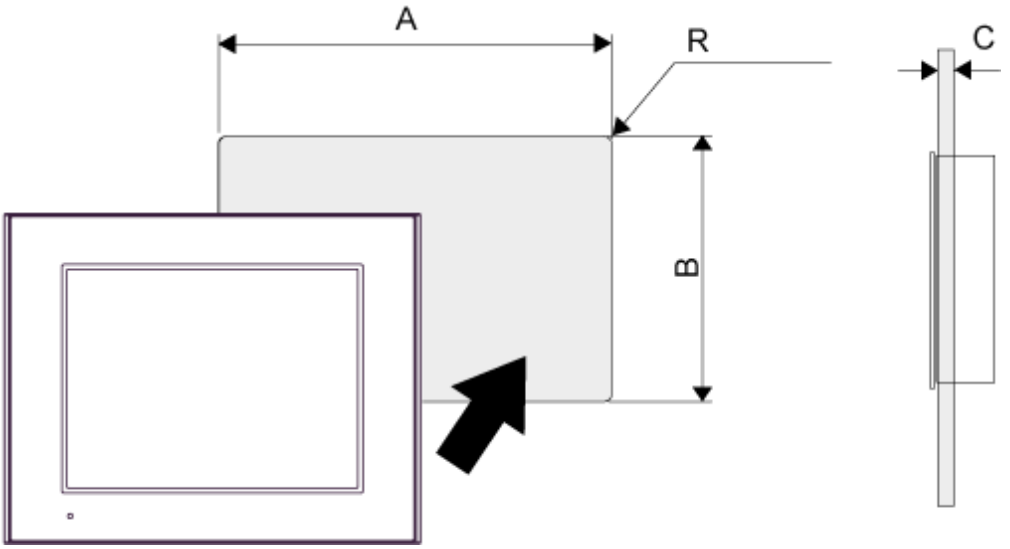

A		B		C		R	
mm	in.	mm	in.	mm	in.	mm	in.
156 (+1, -0)	6.14 (+0.04, -0)	123.5 (+1, -0)	4.86 (+0.04, -0)	1.6...5	0.06...0.2	3 max.	0.12 max.

Installation Fastener Dimensions

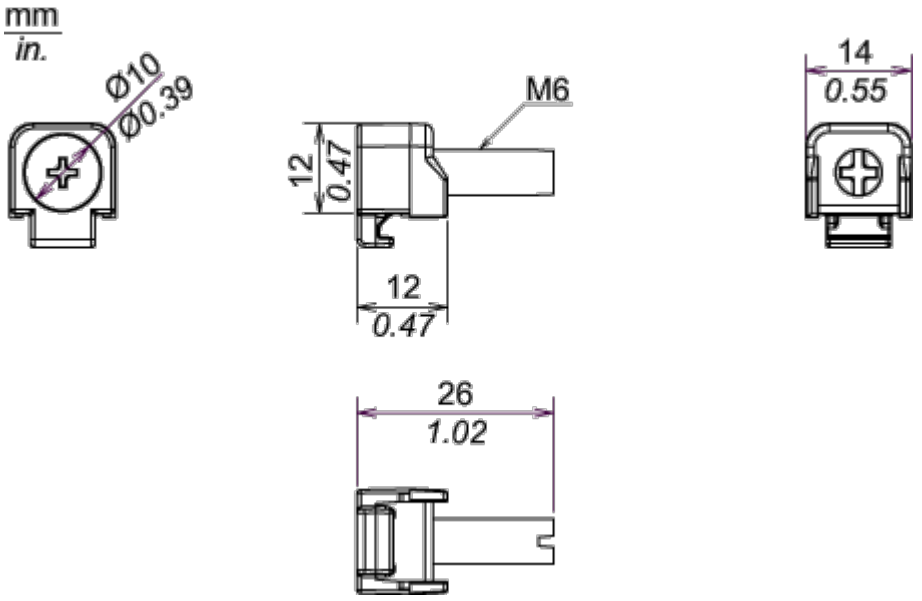

Installation Requirements

Mounting Angle

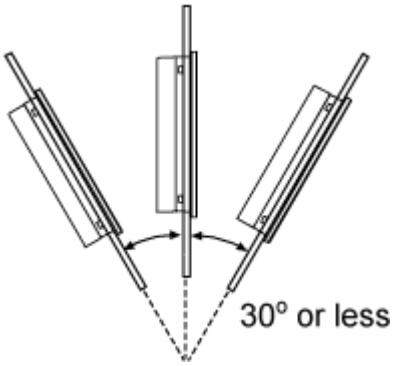

When installing the panel in a slanted position with an incline more than 30°, the ambient temperature must not exceed 40 °C (104 °F). You may need to use forced air cooling (fan,A/C) to ensure the ambient operating temperature is 40°C or less (104 °F or less).
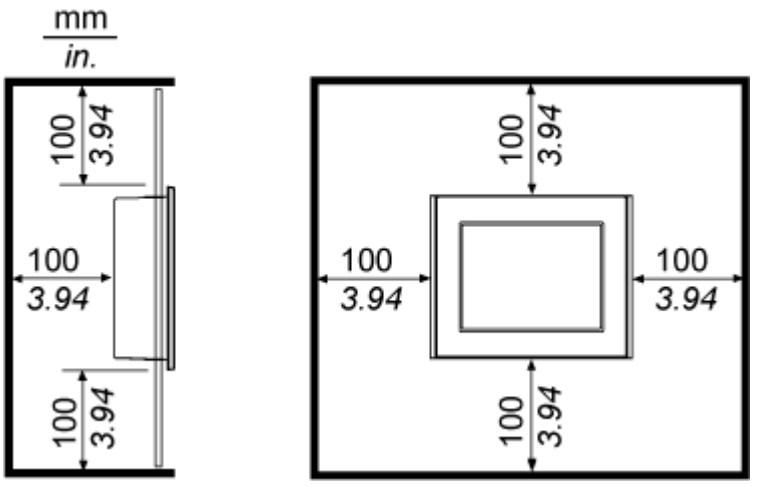
Clearance