Product datasheet

Specifications

Green Premium™

10W Touch Advanced Display WXGA

Local distributor code:

402743059 HMIDT551

EAN Code: 3606480687273

Main

Range Of Product	Harmony GTU
Product Or Component Type	Advanced touchscreen panel
Terminal Type	Touchscreen display
[Us] Rated Supply Voltage	12...24 V DC power supply
Supply Voltage Limits	10.8…28.8 V
Power Consumption In W	6.5 W
Inrush Current	30 A

Complementary

Touchscreen Resolution	1024 x 1024
Pixel Resolution	1280 x 800
Display Size	10.1 inch
Aspect Ratio	4:3
Display Type	Colour TFT LCD
Display Resolution	1280 x 800 pixels WVGA
Display Colour	262144 colors
Backlight Lifespan	50000 hours
Touch Panel	Single touch analogue resistive
Type Of Cooling	Natural convection
Type Of Installation	Indoor installation
Cut-Out Dimensions	255 (+ 1/- 0) x 185 (+ 1/- 0) mm
Width	268.5 mm
Height	198.5 mm
Depth	67 mm
Net Weight	2.5 kg

Environment

Ip Degree Of Protection	Front panel: IP66 Front panel: IP67
Nema Degree Of Protection	NEMA 4X front panel

Disclaimer: This documentation is not intended as a substitute for and is not to be used for determining suitability or reliability of these products for specific user applications

Standards	UL 508 ANSI/ISA 12-12-01 Class I division 2 CSA C22.2 No 213 CSA C22.2 No 142 IEC 61132-2
Product Certifications	RCM CULus KC CE UKCA UKEX
Ambient Air Temperature For Operation	0…60 °C conforming to IEC 61131-2
Ambient Air Temperature For Storage	-20…60 °C
Relative Humidity	10…90 % non-condensing
Operating Altitude	2000 m
Vibration Resistance	3.5 mm constant amplitude (f = 5…9 Hz) conforming to IEC 61131-2 9.8 m/s² (f = 9…150 Hz) conforming to IEC 61131-2
Shock Resistance	147 m/s² conforming to IEC 61131-2
Electromagnetic Compatibility	Electrostatic discharge immunity test level 3 conforming to IEC 61000-4-2

Packing Units

Unit Type Of Package 1	PCE
Number Of Units In Package 1	1
Package 1 Height	21 cm
Package 1 Width	33 cm
Package 1 Length	37 cm
Package 1 Weight	3.853 kg
Unit Type Of Package 2	CAR
Number Of Units In Package 2	2
Package 2 Height	43 cm
Package 2 Width	35.5 cm
Package 2 Length	45.5 cm
Package 2 Weight	8.769 kg
Unit Type Of Package 3	P12
Number Of Units In Package 3	10
Package 3 Height	80 cm
Package 3 Width	120 cm
Package 3 Length	110 cm
Package 3 Weight	96.69 kg

Contractual warranty

Warranty	18 months

Sustainability

Green Premium™ label is Schneider Electric's commitment to delivering products with best-in-class environmental performance. Green Premium promises compliance with the latest regulations, transparency on environmental impacts, as well as circular and low-CO_2 products.

Guide to assessing product sustainability is a white paper that clarifies global eco-label standards and how to interpret environmental declarations.

Learn more about Green Premium >

Guide to assess a product's sustainability >

Transparency RoHS/REACh

Well-being performance

Mercury Free

Rohs Exemption Information	Yes

Certifications & Standards

Reach Regulation	REACh Declaration
Eu Rohs Directive	Pro-active compliance (Product out of EU RoHS legal scope)
China Rohs Regulation	China RoHS declaration
Environmental Disclosure	Product Environmental Profile
Weee	The product must be disposed on European Union markets following specific waste collection and never end up in rubbish bins
Circularity Profile	End of Life Information

Dimensions Drawings

External Dimensions

Display Unit with Box Module

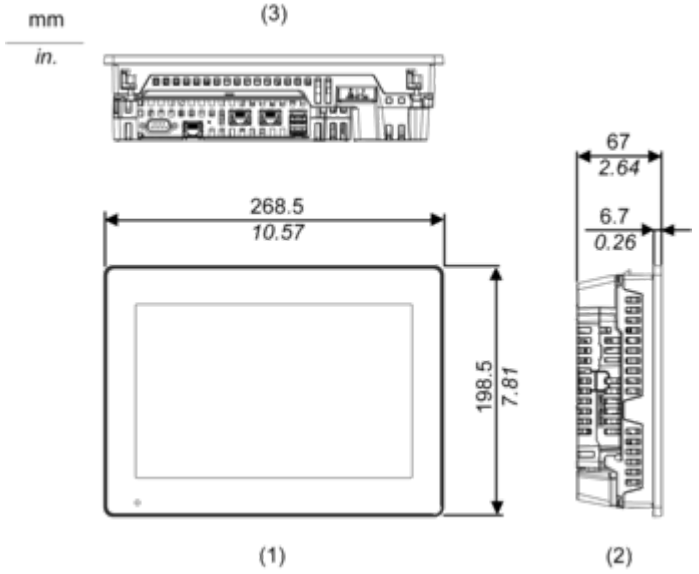

1 Front
2 Left
3 Bottom

Installation with Installation Fasteners and Dimensions with Cables

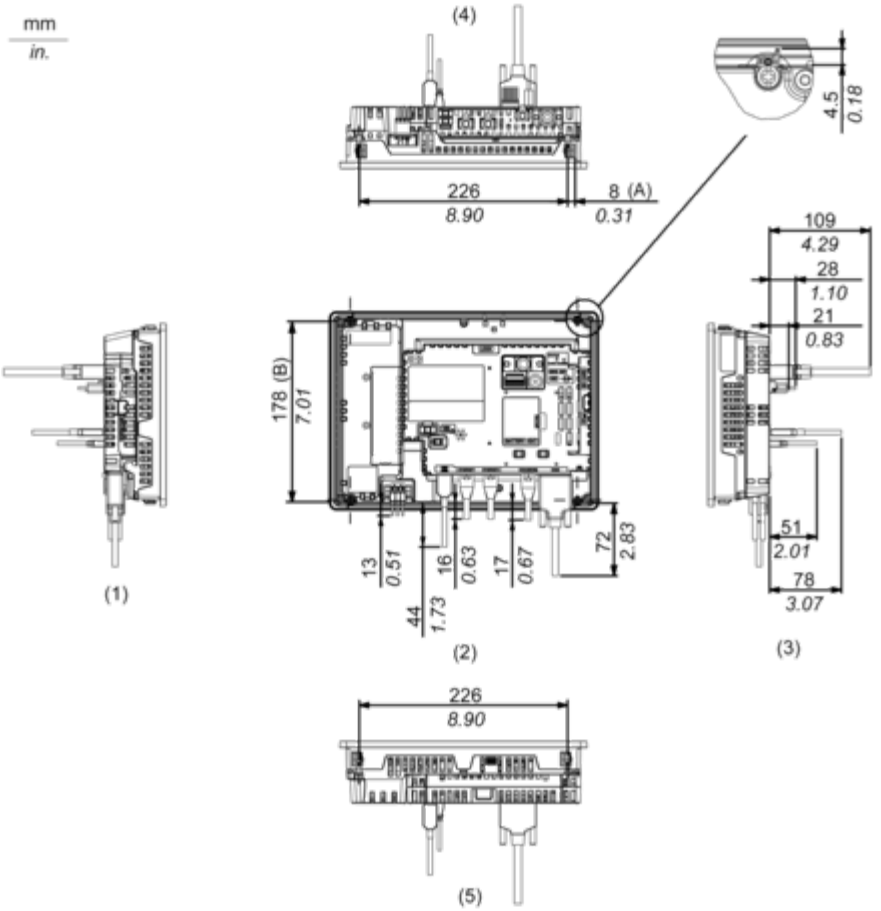

(A) Rotation area of the fastener
(B) Pitch of the center of installation fastner screws
1 Right
2 Front
3 Left
4 Bottom
5 Top

Mounting and Clearance

Mounting

Panel Cut Dimensions

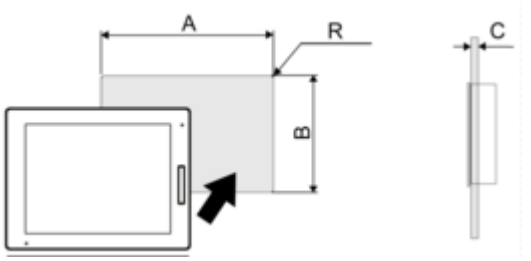

Dimensions in mm

A	B	C	R
255 (+1/-0)	185 (+1/-0)	1.6...5	3 max.

Dimensions in in.

A	B	C	R
10.04 (+0.04/-0)	7.28 (+0.04/-0)	0.06...0.2	0.12 max.

Installation Requirements

Mounting Angle

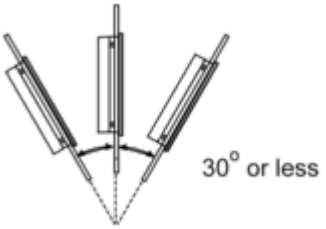

When installing this product in a slanted position with an incline more than 30°, the ambient temperature must not exceed 40 °C (104 °F). You may need to use forced air cooling (fan, A/C) to ensure the ambient operating temperature is 40 °C or less (104 °F or less).
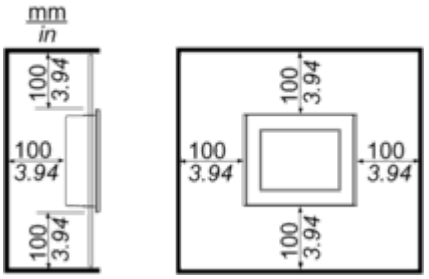
Clearance