Product datasheet

Specifications

Green Premium™

processor module M340 - max 512 discrete + 128 analog I/O - Modbus

Local distributor code:

398050513 BMXP341000H

EAN Code: 3595864024479

Main

Range Of Product	Modicon M340 automation platform
Product Or Component Type	Processor module
Product Specific Application	For severe environments
Number Of Racks	2
Number Of Slots	11
Discrete I/O Processor Capacity	512 I/O single-rack configuration
Analogue I/O Processor Capacity	66 I/O single-rack configuration 128 I/O multi-rack configuration
Number Of Application Specific Channel	20
Monitoring	Diagnostic counters Modbus Event counters Modbus

Complementary

Control Channels	Programmable loops
Integrated Connection Type	Non isolated serial link RJ45 character mode, transmission mode: asynchronous in baseband, RS232C, transmission mode: 2 twisted shielded pairs at 0.3...19.2 kbit/s full duplex Non isolated serial link RJ45 character mode, transmission mode: asynchronous in baseband, RS485, transmission mode: 1 twisted shielded pair at 0.3...19.2 kbit/s half duplex Non isolated serial link RJ45, master/slave Modbus, RTU/ASCII, transmission mode: asynchronous in baseband, RS232C, transmission mode: 1 twisted shielded pair at 0.3...19.2 kbit/s half duplex Non isolated serial link RJ45, master/slave Modbus, RTU/ASCII, transmission mode: asynchronous in baseband, RS485, transmission mode: 1 twisted shielded pair at 0.3...19.2 kbit/s half duplex USB port at 12 Mbit/s
Communication Module Processor Capacity	2 Ethernet communication module 2 AS-Interface module
Number Of Devices Per Segment	0…32 (character mode) 0…32 (Modbus)
Number Of Devices	2 point-to-point character mode 2 point-to-point Modbus
Bus Length	0…10 m serial link non isolated character mode segment 0…10 m serial link non isolated Modbus segment 0…1000 m serial link isolated character mode segment 0…1000 m serial link isolated Modbus segment 0…15 m character mode point-to-point 0…15 m Modbus point-to-point
Maximum Tap Links Length	<15 m serial link non isolated character mode segment <15 m serial link non isolated Modbus segment <40 m serial link isolated character mode segment <40 m serial link isolated Modbus segment

Disclaimer: This documentation is not intended as a substitute for and is not to be used for determining suitability or reliability of these products for specific user applications

Number Of Addresses	0…248 for character mode 0…248 for Modbus
Requests	1 K data bytes per request character mode 252 data bytes per RTU request Modbus 504 data bytes per ASCII request Modbus
Control Parameter	One CRC on each frame (RTU) Modbus One LRC on each frame (ASCII) character mode One LRC on each frame (ASCII) Modbus
Memory Description	Internal RAM 2048 kB Internal RAM 128 kB data Internal RAM 1792 kB program constants and symbols Supplied memory card (BMXRMS008MP) backup of programs, constants, symbols and data
Maximum Size Of Object Areas	128 kB unlocated internal data 16250 %Mi located internal bits 32464 %MWi internal words located internal data 32760 %KWi constant words located internal data
Default Size Of Object Areas	128 %KWi constant words located internal data 256 %Mi located internal bits 512 %MWi internal words located internal data
Application Structure	32 event tasks 1 cyclic/periodic master task 1 periodic fast task No auxiliary task
Execution Time Per Instruction	0.18 µs Boolean 0.26 µs double-length words 0.38 µs single-length words 1.74 µs floating points
Number Of Instructions Per Ms	4.2 Kinst/ms 65 % Boolean + 35 % fixed arithmetic 5.4 Kinst/ms 100 % Boolean
System Overhead	0.2 ms for fast task 1.05 ms for master task
Current Consumption	72 mA at 24 V DC
Supply	Internal power supply via rack
Marking	CE
Status Led	1 LED (green) processor running (RUN) 1 LED (red) I/O module fault (I/O) 1 LED (red) memory card fault (CARD ERR) 1 LED (red) processor or system fault (ERR) 1 LED (yellow) activity on Modbus (SER COM)
Net Weight	0.2 kg

Environment

Ambient Air Temperature For Operation	-25…70 °C
Relative Humidity	10…95 % without condensation
Ip Degree Of Protection	IP20
Protective Treatment	Conformal coating
Directives	2014/35/EU - low voltage directive 2014/30/EU - electromagnetic compatibility 2014/34/EU - ATEX directive
Product Certifications	CE UL CSA RCM EAC Merchant Navy ATEX zone 2/22 IECEx zone 2/22

Standards	EN/IEC 61131-2 EN/IEC 61010-2-201 UL 61010-2-201 CSA C22.2 No 61010-2-201 IACS E10 EN/IEC 61000-6-5, interface type 1 and type 2 EN/IEC 61850-3, location G EN/IEC 60079-0
Environmental Characteristic	Gas resistant class Gx conforming to ISA S71.04 Gas resistant class 3C4 conforming to IEC 60721-3-3 Dust resistant class 3S4 conforming to IEC 60721-3-3 Sand resistant class 3S4 conforming to IEC 60721-3-3 Salt resistant level 2 conforming to IEC 68252 Mold growth resistant class 3B2 conforming to IEC 60721-3-3 Fungal spore resistant class 3B2 conforming to IEC 60721-3-3 Hazardous location class I division 2

Packing Units

Unit Type Of Package 1	PCE
Number Of Units In Package 1	1
Package 1 Height	5.5 cm
Package 1 Width	11.0 cm
Package 1 Length	12.0 cm
Package 1 Weight	247.0 g
Unit Type Of Package 2	S02
Number Of Units In Package 2	15
Package 2 Height	15.0 cm
Package 2 Width	30.0 cm
Package 2 Length	40.0 cm
Package 2 Weight	3.705 kg

Contractual warranty

Warranty	18 months

Sustainability

Green Premium™ label is Schneider Electric's commitment to delivering products with best-in-class environmental performance. Green Premium promises compliance with the latest regulations, transparency on environmental impacts, as well as circular and low-CO_2 products.

Guide to assessing product sustainability is a white paper that clarifies global eco-label standards and how to interpret environmental declarations.

Learn more about Green Premium >

Guide to assess a product's sustainability >

Transparency RoHS/REACh

Well-being performance

Mercury Free

Rohs Exemption Information	Yes

Certifications & Standards

Reach Regulation	REACh Declaration
Eu Rohs Directive	Pro-active compliance (Product out of EU RoHS legal scope)
China Rohs Regulation	China RoHS declaration
Environmental Disclosure	Product Environmental Profile
Weee	The product must be disposed on European Union markets following specific waste collection and never end up in rubbish bins
Circularity Profile	End of Life Information

Dimensions Drawings

Modules Mounted on Racks

Dimensions

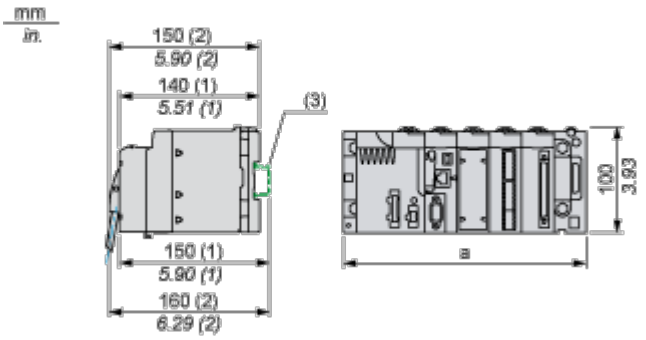

(1) With removable terminal block (cage, screw or spring).

(2) With FCN connector.

(3) On AM1 ED rail: 35 mm wide, 15 mm deep. Only possible with BMXXBP0400/0400H/0600/0600H/0800/0800H rack.

Rack references	a in mm	a in in.
BMXXBP0400 and BMXXBP0400H	242.4	09.54
BMXXBP0600 and BMXXBP0600H	307.6	12.11
BMXXBP0800 and BMXXBP0800H	372.8	14.68
BMXXBP1200 and BMXXBP1200H	503.2	19.81