Product datasheet

Specifications

variable speed drive ATV212 - 15kW - 20hp - 480V - 3ph - EMC class C2 - IP55

Local distributor code:

398227281 ATV212WD15N4

EAN Code: 3606480322242

Main

Device Short Name	ATV212
Product Destination	Asynchronous motors
Network Number Of Phases	3 phases
Motor Power Kw	15 kW
Motor Power Hp	20 hp
Supply Voltage Limits	323…528 V
Supply Frequency	50...60 Hz - 5...5 %
Line Current	22.6 A at 480 V 28.4 A at 380 V
Range Of Product	Altivar 212
Product Or Component Type	Variable speed drive
Product Specific Application	Pumps and fans in HVAC
Communication Port Protocol	Modbus METASYS N2 BACnet LonWorks APOGEE FLN
[Us] Rated Supply Voltage	380...480 V - 15...10 %
Emc Filter	Class C2 EMC filter integrated
Ip Degree Of Protection	IP55

Complementary

Apparent Power	23.2 kVA at 380 V
Continuous Output Current	30.5 A at 380 V 30.5 A at 460 V
Maximum Transient Current	33.6 A for 60 s
Speed Drive Output Frequency	0.5…200 Hz
Speed Range	1…10
Speed Accuracy	+/- 10 % of nominal slip 0.2 Tn to Tn
Local Signalling	1 LED (red) for DC bus energized
Output Voltage	<= power supply voltage
Isolation	Electrical between power and control
Type Of Cable	Without mounting kit: 1 wire(s)IEC cable at 45 °C, copper 90 °C / XLPE/EPR Without mounting kit: 1 wire(s)IEC cable at 45 °C, copper 70 °C / PVC With UL Type 1 kit: 3 wire(s)UL 508 cable at 40 °C, copper 75 °C / PVC

Disclaimer: This documentation is not intended as a substitute for and is not to be used for determining suitability or reliability of these products for specific user applications

Electrical Connection	VIA, VIB, FM, FLA, FLB, FLC, RY, RC, F, R, RES: terminal 2.5 mm² / AWG 14 L1/R, L2/S, L3/T: terminal 16 mm² / AWG 4
Tightening Torque	0.6 N.m (VIA, VIB, FM, FLA, FLB, FLC, RY, RC, F, R, RES) 3 N.m, 26.5 lb.in (L1/R, L2/S, L3/T)
Supply	Internal supply for reference potentiometer (1 to 10 kOhm): 10.5 V DC +/- 5 %, <10 A, protection type: overload and short-circuit protection Internal supply: 24 V DC (21…27 V), <200 A, protection type: overload and short-circuit protection
Sampling Duration	2 ms +/- 0.5 ms F discrete 2 ms +/- 0.5 ms R discrete 2 ms +/- 0.5 ms RES discrete 3.5 ms +/- 0.5 ms VIA analog 22 ms +/- 0.5 ms VIB analog
Response Time	FM 2 ms, tolerance +/- 0.5 ms for analog output(s) FLA, FLC 7 ms, tolerance +/- 0.5 ms for discrete output(s) FLB, FLC 7 ms, tolerance +/- 0.5 ms for discrete output(s) RY, RC 7 ms, tolerance +/- 0.5 ms for discrete output(s)
Accuracy	+/- 0.6 % (VIA) for a temperature variation 60 °C +/- 0.6 % (VIB) for a temperature variation 60 °C +/- 1 % (FM) for a temperature variation 60 °C
Linearity Error	VIA: +/- 0.15 % of maximum value for input VIB: +/- 0.15 % of maximum value for input FM: +/- 0.2 % for output
Analogue Output Type	FM switch-configurable voltage 0...10 V DC, impedance: 7620 Ohm, resolution 10 bits FM switch-configurable current 0...20 mA, impedance: 970 Ohm, resolution 10 bits
Discrete Output Type	Configurable relay logic: (FLA, FLC) NO - 100000 cycles Configurable relay logic: (FLB, FLC) NC - 100000 cycles Configurable relay logic: (RY, RC) NO - 100000 cycles
Minimum Switching Current	3 mA at 24 V DC for configurable relay logic
Maximum Switching Current	5 A at 250 V AC on resistive load - cos phi = 1 - L/R = 0 ms (FL, R) 5 A at 30 V DC on resistive load - cos phi = 1 - L/R = 0 ms (FL, R) 2 A at 250 V AC on inductive load - cos phi = 0.4 - L/R = 7 ms (FL, R) 2 A at 30 V DC on inductive load - cos phi = 0.4 - L/R = 7 ms (FL, R)
Discrete Input Type	F programmable 24 V DC, with level 1 PLC, impedance: 4700 Ohm R programmable 24 V DC, with level 1 PLC, impedance: 4700 Ohm RES programmable 24 V DC, with level 1 PLC, impedance: 4700 Ohm
Discrete Input Logic	Positive logic (source) (F, R, RES), <= 5 V (state 0), >= 11 V (state 1) Negative logic (sink) (F, R, RES), >= 16 V (state 0), <= 10 V (state 1)
Dielectric Strength	3535 V DC between earth and power terminals 5092 V DC between control and power terminals
Insulation Resistance	>= 1 mOhm 500 V DC for 1 minute
Frequency Resolution	Display unit: 0.1 Hz Analog input: 0.024/50 Hz
Communication Service	Time out setting from 0.1 to 100 s Write single register (06) Write multiple registers (16) 2 words maximum Read device identification (43) Monitoring inhibitable Read holding registers (03) 2 words maximum
Option Card	Communication card for LonWorks
Functionality	Mid
Specific Application	HVAC
Discrete Output Number	2
Analogue Input Number	2

Analogue Input Type	VIA switch-configurable voltage: 0...10 V DC 24 V max, impedance: 30000 Ohm, resolution 10 bits VIB configurable voltage: 0...10 V DC 24 V max, impedance: 30000 Ohm, resolution 10 bits VIB configurable PTC probe: 0...6 probes, impedance: 1500 Ohm VIA switch-configurable current: 0...20 mA, impedance: 250 Ohm, resolution 10 bits
Analogue Output Number	1
Physical Interface	2-wire RS 485
Connector Type	1 RJ45 1 open style
Transmission Rate	9600 bps or 19200 bps
Transmission Frame	RTU
Number Of Addresses	1…247
Data Format	8 bits, 1 stop, odd even or no configurable parity
Type Of Polarization	No impedance
Asynchronous Motor Control Profile	Voltage/frequency ratio - Energy Saving, quadratic U/f Voltage/frequency ratio, automatic IR compensation (U/f + automatic Uo) Voltage/frequency ratio, 2 points Flux vector control without sensor, standard Voltage/frequency ratio, 5 points
Torque Accuracy	+/- 15 %
Transient Overtorque	120 % of nominal motor torque +/- 10 % for 60 s
Acceleration And Deceleration Ramps	Automatic based on the load Linear adjustable separately from 0.01 to 3200 s
Motor Slip Compensation	Not available in voltage/frequency ratio motor control Automatic whatever the load Adjustable
Switching Frequency	6...16 kHz adjustable 12...16 kHz with derating factor
Nominal Switching Frequency	12 kHz
Braking To Standstill	By DC injection
Network Frequency	47.5...63 Hz
Prospective Line Isc	22 kA
Protection Type	Overheating protection: drive Thermal power stage: drive Short-circuit between motor phases: drive Input phase breaks: drive Overcurrent between output phases and earth: drive Overvoltages on the DC bus: drive Break on the control circuit: drive Against exceeding limit speed: drive Line supply overvoltage and undervoltage: drive Line supply undervoltage: drive Against input phase loss: drive Thermal protection: motor Motor phase break: motor With PTC probes: motor
Width	290 mm
Height	560 mm
Depth	315 mm
Net Weight	30.3 kg

Environment

Pollution Degree	2 conforming to IEC 61800-5-1

Ip Degree Of Protection	IP55 conforming to IEC 61800-5-1 IP55 conforming to IEC 60529
Vibration Resistance	1.5 mm (f= 3…13 Hz) conforming to IEC 60068-2-6 1 gn (f= 13…200 Hz) conforming to EN/IEC 60068-2-8
Shock Resistance	15 gn for 11 ms conforming to IEC 60068-2-27
Environmental Characteristic	Classes 3C1 conforming to IEC 60721-3-3 Classes 3S2 conforming to IEC 60721-3-3
Noise Level	57.4 dB conforming to 86/188/EEC
Operating Altitude	1000...3000 m limited to 2000 m for the Corner Grounded distribution network with current derating 1 % per 100 m <= 1000 m without derating
Relative Humidity	5…95 % without condensation conforming to IEC 60068-2-3 5…95 % without dripping water conforming to IEC 60068-2-3
Ambient Air Temperature For Operation	-10…40 °C (without derating) 40…50 °C (with derating factor)
Operating Position	Vertical +/- 10 degree
Product Certifications	NOM 117 C-Tick UL CSA
Marking	CE
Standards	IEC 61800-5-1 IEC 61800-3 environments 1 category C1 IEC 61800-3 category C2 IEC 61800-3 category C3 IEC 61800-3 environments 1 category C1 IEC 61800-3 category C2 IEC 61800-3 IEC 61800-3 environments 1 category C2 IEC 61800-5-1 IEC 61800-3 environments 2 category C2 IEC 61800-3 environments 1 category C2 IEC 61800-3 environments 2 category C3 IEC 61800-3 environments 1 category C3 IEC 61800-3 environments 2 category C1 IEC 61800-3 environments 2 category C2 IEC 61800-3 IEC 61800-3 environments 2 category C1 EN 61800-3 category C3 EN 55011 class A group 1 IEC 61800-3 environments 1 category C3 IEC 61800-3 environments 2 category C3
Assembly Style	With heat sink
Electromagnetic Compatibility	Electrostatic discharge immunity test level 3 conforming to IEC 61000-4-2 Radiated radio-frequency electromagnetic field immunity test level 3 conforming to IEC 61000-4-3 Electrical fast transient/burst immunity test level 4 conforming to IEC 61000-4-4 1.2/50 µs - 8/20 µs surge immunity test level 3 conforming to IEC 61000-4-5 Conducted radio-frequency immunity test level 3 conforming to IEC 61000-4-6 Voltage dips and interruptions immunity test conforming to IEC 61000-4-11
Regulation Loop	Adjustable PI regulator
Ambient Air Temperature For Storage	-25…70 °C

Packing Units

Unit Type Of Package 1	PCE
Number Of Units In Package 1	1
Package 1 Height	39 cm
Package 1 Width	40 cm

Package 1 Length	80 cm
Package 1 Weight	28 kg

Contractual warranty

Warranty	18 months

Sustainability

Green Premium™ label is Schneider Electric's commitment to delivering products with best-in-class environmental performance. Green Premium promises compliance with the latest regulations, transparency on environmental impacts, as well as circular and low-CO_2 products.

Guide to assessing product sustainability is a white paper that clarifies global eco-label standards and how to interpret environmental declarations.

Learn more about Green Premium >

Guide to assess a product's sustainability >

Transparency RoHS/REACh

Well-being performance

Mercury Free

Rohs Exemption Information	Yes

Certifications & Standards

Reach Regulation	REACh Declaration
Eu Rohs Directive	Pro-active compliance (Product out of EU RoHS legal scope)
China Rohs Regulation	China RoHS declaration
Environmental Disclosure	Product Environmental Profile
Weee	The product must be disposed on European Union markets following specific waste collection and never end up in rubbish bins
Circularity Profile	End of Life Information

Dimensions Drawings

Dimensions

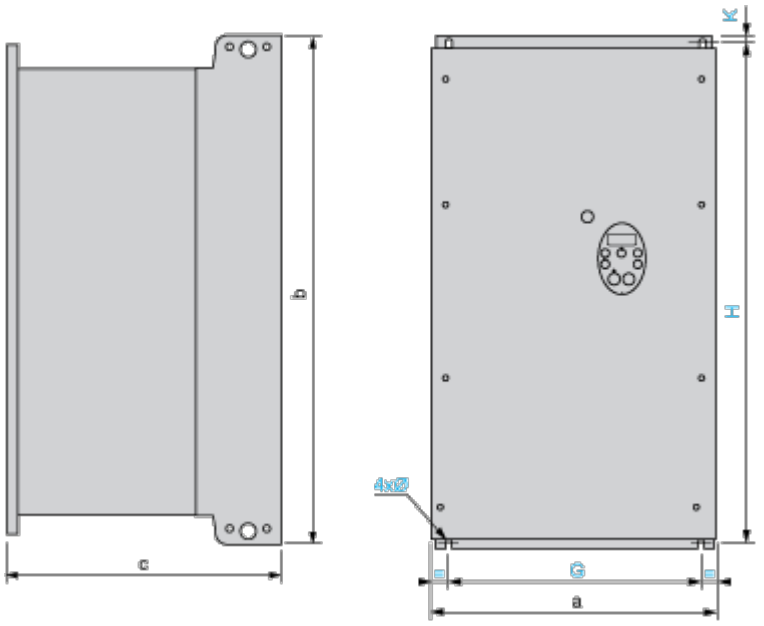

Dimensions in mm

ATV212W	a	b	c	G	H	K	ø
D11N4, D15N4 D11N4C, D15N4C	290	560	315	250	544	8	6
D18N4 D18N4C	310	665	315	270	650	10	6
D22N4, D30N4 D22N4C, D30N4C	284	720	315	245	700	10	7
D37N4, D45N4 D37N4C, D45N4C	284	880	343	245	860	10	7
D55N4, D75N4 D55N4C, D75N4C	362	1000	364	300	975	10	9

Dimensions in in.

ATV212W	a	b	c	G	H	K	ø
D11N4, D15N4 D11N4C, D15N4C	11.42	22.05	12.40	9.84	21.42	0.31	0.24
D18N4 D18N4C	12.20	26.18	12.40	10.63	25.59	0.39	0.24
D22N4, D30N4 D22N4C, D30N4C	11.18	28.35	12.40	9.65	27.56	0.39	0.27
D37N4, D45N4 D37N4C, D45N4C	11.18	34.65	13.50	9.65	33.86	0.39	0.27
D55N4, D75N4 D55N4C, D75N4C	14.25	39.37	14.33	11.81	38.39	0.39	0.35

Mounting and Clearance

Mounting Recommendations

Clearance

Depending on the conditions in which the drive is to be used, its installation will require certain precautions and the use of appropriate accessories.
Install the unit vertically:

- Do not place it close to heating elements.
- Leave sufficient free space to ensure that the air required for cooling purposes can circulate from bottom to the top of the unit.

Type A Mounting

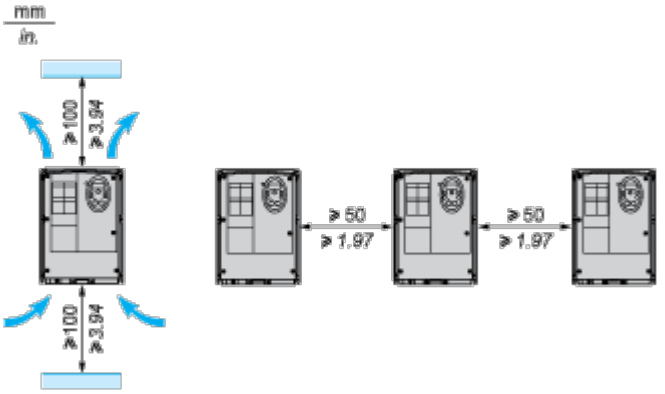

Connections and Schema

Recommended Wiring Diagram

3-Phase Power Supply

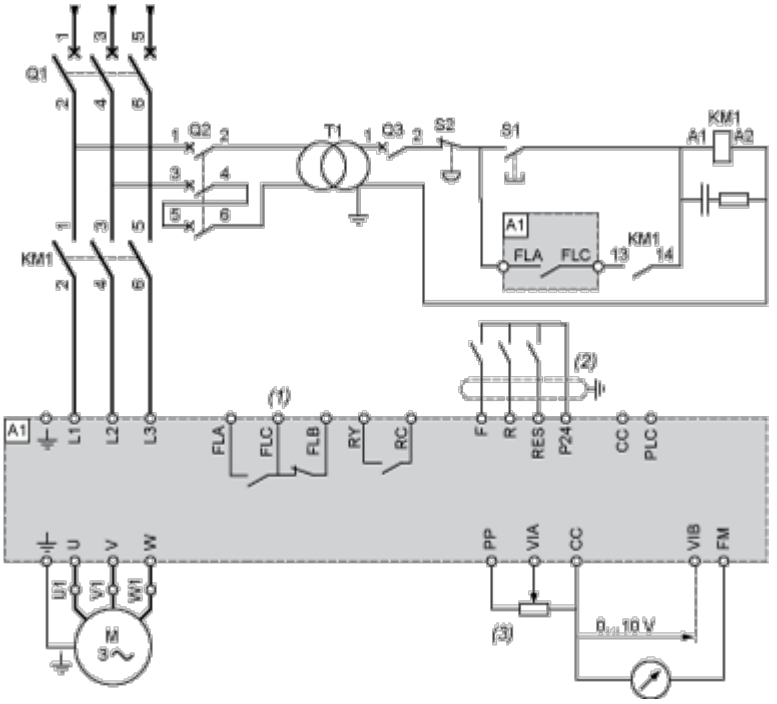

A1: ATV 212 drive

KM1: Contactor

Q1: Circuit breaker

Q2: GV2 L rated at twice the nominal primary current of T1

Q3: GB2CB05

S1, S2: XB4 B or XB5 A pushbuttons

T1: 100 VA transformer 220 V secondary

(1) Fault relay contacts for remote signalling of the drive status

(2) Connection of the common for the logic inputs depends on the positioning of the switch (Source, PLC, Sink)

(3) Reference potentiometer SZ1RV1202

NOTE: All terminals are located at the bottom of the drive. Install interference suppressors on all inductive circuits near the drive or connected on the same circuit, such as relays, contactors, solenoid valves, fluorescent lighting, etc.

Switches (Factory Settings)

Voltage/current selection for analog I/O (VIA and VIB)

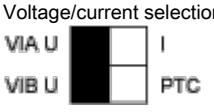

Voltage/current selection for analog I/O (FM)

Selection of logic type

(1) negative logic

(2) positive logic

Other Possible Wiring Diagrams

Logic Inputs According to the Position of the Logic Type Switch

"Source" position

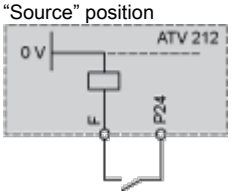

"Sink" position

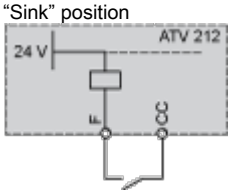

"PLC" position with PLC transistor outputs	
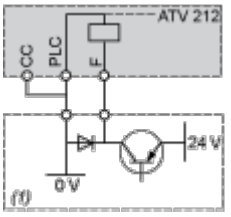 (1) PLC	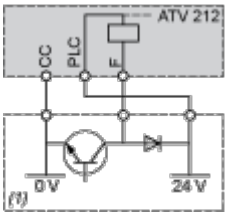 (1) PLC

2-wire control

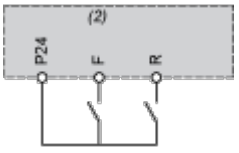

F: Forward

R: Preset speed

(2) ATV 212 control terminals

3-wire control

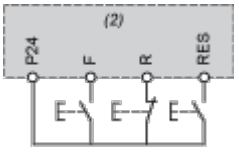

F: Forward

R: Stop

RES: Reverse

(2) ATV 212 control terminals

PTC probe

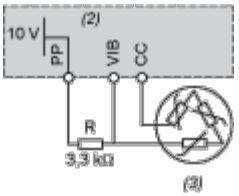

(2) ATV 212 control terminals

(3) Motor

Analog Inputs

Voltage analog inputs

External +10 V	
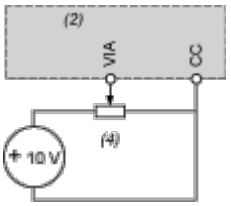 (2) ATV 212 control terminals (4) Speed reference potentiometer 2.2 to 10 kΩ	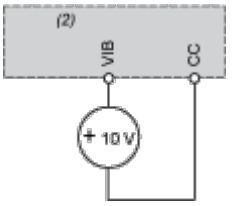 (2) ATV 212 control terminals

Analog input configured for current: 0-20 mA, 4-20 mA, X-Y mA

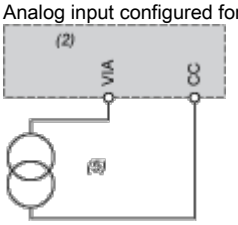

(2) ATV 212 control terminals

(5) Source 0-20 mA, 4-20 mA, X-Y mA

Analog input VIA configured as positive logic input (“Source” position)

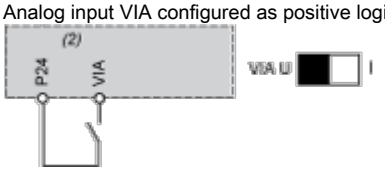

(2) ATV 212 control terminals

Analog input VIA configured as negative logic input (“Sink” position)

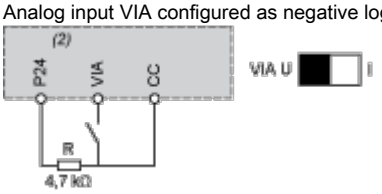

(2) ATV 212 control terminals

Performance Curves

Derating Curves

The derating curves for the drive nominal current (In) depend on the temperature and the switching frequency.
For intermediate temperatures (45°C for example), interpolate between 2 curves.

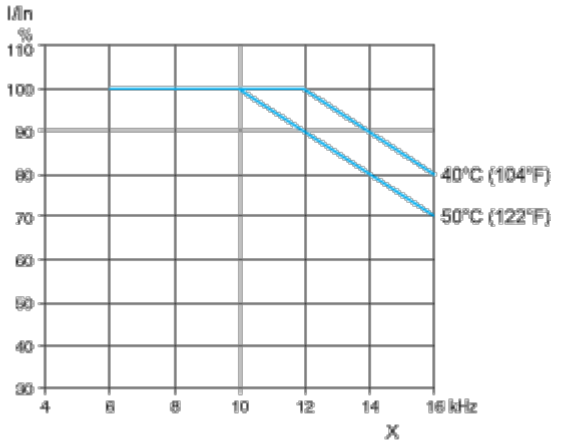

X Switching frequency