Product datasheet

Specifications

Green Premium™

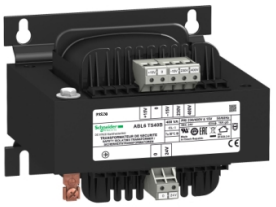

voltage transformer - 230..400 V - 1 x 24 V - 400 VA

Local distributor code:

391190904 ABL6TS40B

To be discontinued on: 30 May 2024

To be end-of-service on: 30 May 2025

To be discontinued

EAN Code: 3389110601329

Main

Range Of Product	Modicon Transformer Optimized
Product Or Component Type	Safety and isolation transformer
Rated Power In Va	400 VA
Input Voltage	230 V AC single phase, terminal(s): N-L1 400 V AC phase to phase, terminal(s): L1-L2
Output Voltage	24 V AC
Secondary Winding	Single
Protective Cover	Without
Ambient Air Temperature For Operation	-20…50 °C

Complementary

Input Voltage Limits	360...440 V 207...253 V
Network Frequency Limits	47…63 Hz
Input Voltage Tolerance	+/- 15 V
Efficiency	92 %
Power Dissipation In W	34.8 W
Output Sustained Overvoltage	4 % (no load, hot state)
Maximum Voltage Drop At Rated Load	0.7 %
No Load Losses	12.4 W
Short-Circuit Voltage	0,045
Output Protection Type	Against overload, protection technology: with additional protection fuses or circuit-breakers in Selection of Protection Against overvoltage, protection technology: with additional protection fuses or circuit-breakers in Selection of Protection Against short-circuits, protection technology: with additional protection fuses or circuit-breakers in Selection of Protection
Connections - Terminals	For input connection: screw type terminals, connection capacity: 5 x 4 mm² AWG 11 For input ground connection: screw type terminals, connection capacity: 1 x 4 mm² AWG 11 For output connection: screw type terminals, connection capacity: 2 x 10 mm² AWG 6
Marking	CE
Fixing Mode	By 4 screws diameter: 5.8 mm on vertical panel, operating position: horizontal By 4 screws diameter: 5.8 mm on vertical panel, operating position: vertical By 4 screws diameter: 5.8 mm on horizontal panel with derating to 90 %
Operating Altitude	3000 m

Disclaimer: This documentation is not intended as a substitute for and is not to be used for determining suitability or reliability of these products for specific user applications

Electrical Insulation Class	Class B
Width	135.0 mm
Height	120.0 mm
Depth	136.0 mm
Net Weight	6.31 kg

Environment

Product Certifications	EAC UR DNV-GL
Standards	UL 506
Ip Degree Of Protection	IP20
Environmental Characteristic	EMC conforming to EN 62041 Safety conforming to EN 61558-1 Safety conforming to EN 61558-2-6
Protective Treatment	TC
Ambient Air Temperature For Storage	-40…80 °C
Overvoltage Category	Class I conforming to VDE 0106-1
Dielectric Strength	2000 V between winding and ground 4000 V between primary and secondary

Packing Units

Unit Type Of Package 1	PCE
Number Of Units In Package 1	1
Package 1 Height	26.500 cm
Package 1 Width	19.000 cm
Package 1 Length	23.000 cm
Package 1 Weight	6.834 kg
Unit Type Of Package 2	P06
Number Of Units In Package 2	15
Package 2 Height	75.000 cm
Package 2 Width	60.000 cm
Package 2 Length	80.000 cm
Package 2 Weight	115.510 kg

Contractual warranty

Warranty	18 months

Sustainability

Green Premium™ label is Schneider Electric's commitment to delivering products with best-in-class environmental performance. Green Premium promises compliance with the latest regulations, transparency on environmental impacts, as well as circular and low-CO_2 products.

Guide to assessing product sustainability is a white paper that clarifies global eco-label standards and how to interpret environmental declarations.

Learn more about Green Premium >

Guide to assess a product's sustainability >

Transparency RoHS/REACh

Well-being performance

Mercury Free	
Rohs Exemption Information	Yes
Pvc Free	

Certifications & Standards

Reach Regulation	REACh Declaration
Eu Rohs Directive	Pro-active compliance (Product out of EU RoHS legal scope)
China Rohs Regulation	China RoHS declaration
Environmental Disclosure	Product Environmental Profile
Circularity Profile	No need of specific recycling operations Circularity Profile

Dimensions Drawings

Dimensions

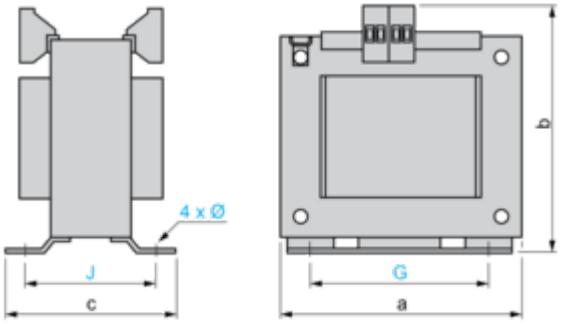

Dimensions in mm

a	b	c	G	J	Ø
135	136	120	104	87	5.8

Dimensions in in.

a	b	c	G	J	Ø
5.31	5.35	4.72	4.09	3.42	0.23

Connections and Schema

Internal Scheme

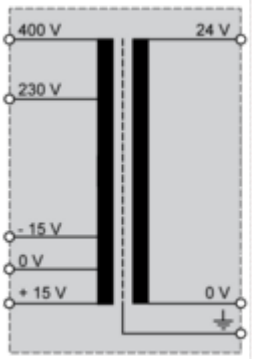

Primary Voltage Wiring

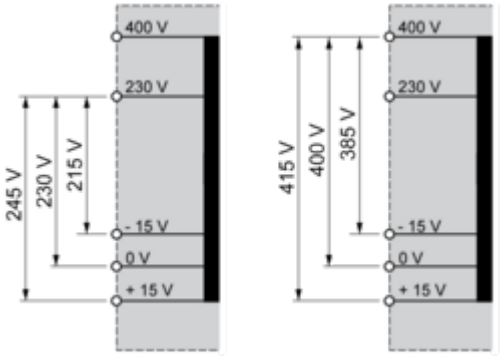
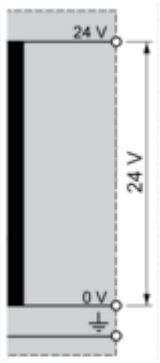
Secondary Voltage Wiring